Goodwyn Mills Cawood
1906 E Three Notch Street
Andalusia, Alabama 36421
T 334.222.2699

TRANSMITTAL COVER SHEET

DATE: **APRIL 2, 2025**

TO: **ALL CONTRACTORS**

FROM: **DUSTIN TILL, P.E.**

PROJECT: **COUNTY ROAD 29 WATER TREATMENT PLANT**
PRATTVILLE WATER WORKS BOARD
GMC PROJECT NO. CMGM230095

RE: **ADDENDUM #1**

PLEASE COMPLETE BELOW AND EMAIL IMMEDIATELY TO:

patsy.stinson@gmcnetwork.com

I, the undersigned, hereby acknowledge receipt of this Addendum.

_____ _____
Authorized Representative of Contractor Date

_____ _____ _____
Company Name Telephone Fax

_____
Contractor's License Number (if applicable)

ADDENDUM NUMBER 1

COUNTY ROAD 29 WATER TREATMENT PLANT
FOR
PRATTVILLE WATER WORKS BOARD
GMC PROJECT NO. CMGM230095

1. General

1.1 The following revisions are hereby added as Addendum No. 1 to the referenced Project Manual and Plans and shall be considered when preparing bids.

2. Revisions to Project Manual

2.1 ACI is an approved manufacturer for the Pre-Engineered Metal Building.

2.2 The electrical, mechanical and plumbing drawings have been revised and are included as an attachment to this addendum. Revisions are clouded.

2.3 C-901 has been revised to include a concrete paving detail.

3. Attachments

3.1 Revised Electrical, Mechanical and Plumbing Drawings.

3.2 Revised Specification 43 23 13 – Vertical Turbine Pumps

3.3 Revised Drawing I-901 – Instrumentation Details

3.4 Revised Drawing D-911 – Valve Schedule

3.5 Revised Sheet C-901 – Civil Details

4. Questions

4.1 **Question: We have been unable to locate a fence detail. Are we to assume a 6' fabric with 1' of barbed wire around the top to match the Cook/Smith plant site? Walls Fence said your specification matches the same material they used at the other Prattville Water Works sites.**
Answer: Yes, the fence shall be 6' fabric with 1' barbed wire at the top according to Specification 32 31 13.

4.2 **Question: I see a reference in the specs that Davis-Bacon wages are required but there is no wage rates included. We can look these up if required.**
Answer: Davis-Bacon wage rates are not required for this project.

4.3 **Question: Is this project federally funded and is AIS a requirement? Is BABA a requirement? I have not seen either of these as a requirement in the specs. Please advise.**
Answer: No, this is a locally funded project so there are no AIS or BABA requirements.

4.4 **Question: Does the metal building manufacturer need to provide roof vents?**
Answer: A ridge vent shall be provided on the metal building.

4.5 **Question: Please confirm wall insulation. R15 is not standard. 4" (R13) is a standard thickness. 6" (R19) is available but not recommended for walls.**
Answer: R13 is acceptable for walls.

4.6 **Question: The bid form states substantial completion is 450 days and final completion is 480 days. The agreement lists these as 360 and 390 respectively, please confirm which is correct**
Answer: The bid form is correct (450 days for substantial completion and 480 days for final completion). The agreement will be revised after the bid.

4.7 **Question: Where does the 4" sewer line shown on sheet P1.0 go? The civil drawings do not specifically detail this line. Does it show up as the 3" Drain line shown on sheet C-311?**
Answer: The 4" sewer line as shown on the plumbing drawings shall connect to the 3" drain line shown on Sheet C-311.

4.8 **Question: Sheet C-311 lists the Plant Service Water line as 3", sheet D-601 and D-611 shows this line as 4", which is correct?**
Answer: The referenced plant service water line is 4". It reduces to 3" when it gets inside the building.

4.9 **Question: Sheet A-601, Note 14 states the Electrical Room and Chlorine Room ceilings are hollow core slabs on masonry walls. Section E on sheet S-607 shows the ceiling in the Electrical Room as a joist system with bridging. Sheet S-603 shows the ceilings in these two rooms as a joist system with bridging also. Please confirm what type of ceiling is required in these two rooms. Along with that, the walls of these rooms need to be confirmed as to what they are, sheet A-601 shows the walls of these rooms as metal studs, but if hollow core slabs are required as the ceiling, the walls can't be metal studs**
Answer: Disregard Note 14 on Sheet A-601. The ceilings are joist systems with bridging as shown on the structural drawings. The walls are metal stud walls as indicated on A-601.

4.10 **Question: The valve schedule on sheet D-911 appears to be for another project, the valves listed in the schedule do not match the contract drawings for this project, please provide a correct valve schedule with all of the required valves for the project.**
Answer: The correct valve schedule is included as an attachment to this addendum.

4.11 **Question: Is there a specification on the Chemical Feed Pull Box shown on sheet D-601 and D-812?**
Answer: The chemical pull boxes shall be minimum 18" wide x 24" long plastic valve box.

4.12 **Question: Sheet C-211 states see sheet C-901 for details of the concrete paving; however, it does not show up on sheet C-901 or any other sheet, please provide a detail for the concrete paving required on the project**
Answer: A concrete paving detail has been added to C-901. The revised sheet is included as an attachment to this addendum.

4.13 **Question: Please approve Foley Products as an equal for the Flat Grate Inlets on the project.**
Answer: Foley Products is acceptable.

4.14 **Question: Sheet S-001, note 10 under the Structural Steel heading states "All steel items shall be Hot Dipped Galvanized per ASTM A123". The Pre-Engineered Metal Building specification does not call for all structural members to be hot-dipped galvanized, only some of the secondary framing members call to be galvanized steel. Please confirm how the structural Rigid Frames, and Primary and Secondary framing members are to be supplied to the site, galvanized or shop primed.**

Answer: The structural framing of the pre-engineered metal building shall be shop primed and field painted according to Specification 09 96 00 – High Performance Coatings.

4.15 **Question: Can the Influent Meter Vault and Rapid Mixer Vault be provided as cast in place structures if we provided a PE sealed and stamped drawings for each structure?**
Answer: Yes, that is acceptable.

4.16 **Question: Sheet D-811, Detail 4 – Enlarged Plan shows detail 11, what is this? Please provide this detail.**
Answer: This is referencing the Type 11 pipe support on D-903.

4.17 **Question: On sheet D-201, can the reference of detail E on sheet D-901 be changed to Detail G on sheet D-901 for a cored hole since they are precast structures?**
Answer: Detail G is acceptable for use.

4.18 **Question: The specifications provide the well development diagram for the Wynona Well, is one available for the CR 29 Well?**
Answer: The CR 29 well pump is being provided by the Owner. The contractor will just need to connect piping and electrical to this pump.

5. Acknowledgement of Receipt

5.1 Receipt of Addendum No. 1 shall be acknowledged in two ways:

5.1.1 Note on (EJCDC C-410) page 5 of Bid Form – Bidder acknowledges receipt of "Addendum No. 1" and date of "April 2, 2025".

AND

5.1.2 EMAIL GMC immediately at patsy.stinson@gmcnetwork.com and confirm that addendum has been received and is legible with signed Acknowledgement attached.

6. Conclusion

6.1 This is the end of Addendum No. 1, dated Wednesday, April 2, 2025.

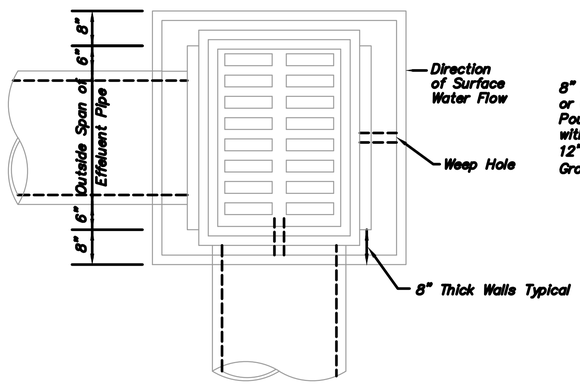

Plan

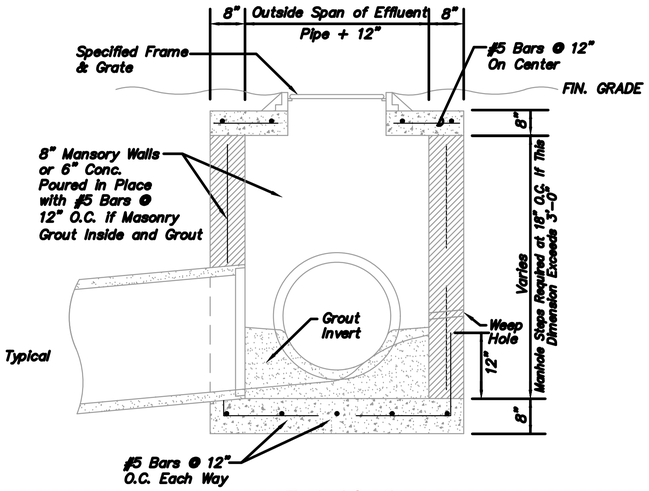

Typical Section

STANDARD FLAT GRATE INLET

N.T.S.

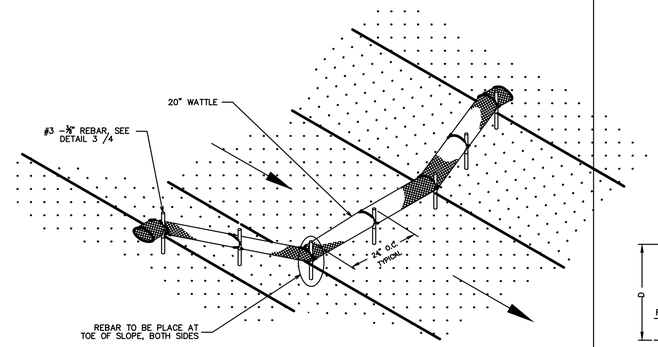

WATTLE DETAIL
(DITCH CHECK)

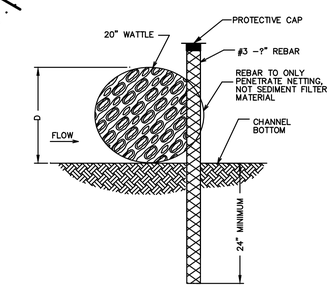

WATTLE DETAIL SECTION

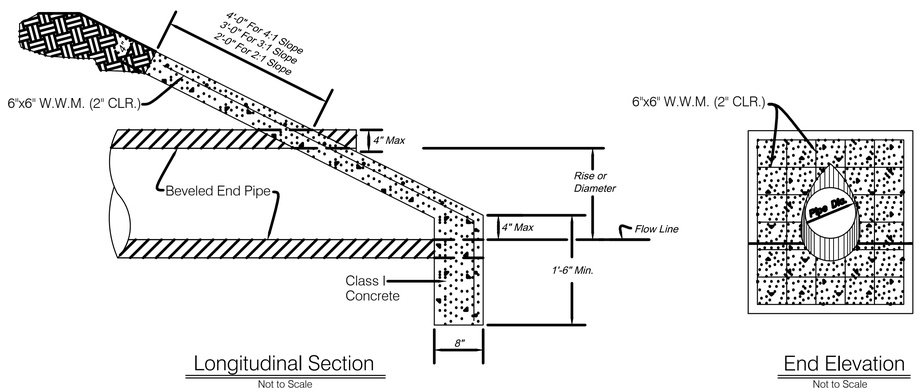

Longitudinal Section
Not to Scale

End Elevation
Not to Scale

CONCRETE SLOPE PAVED HEADWALL

N.T.S.

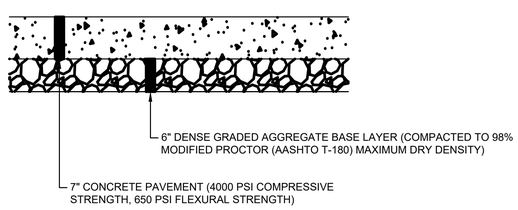

CONCRETE PAVING

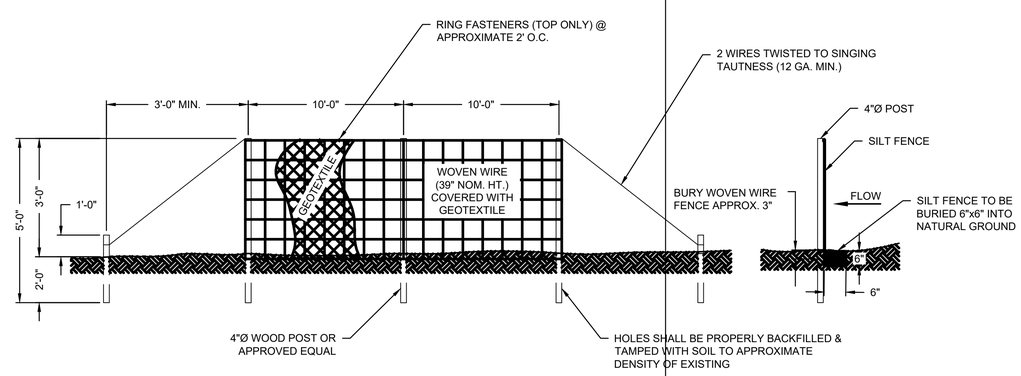

TYPE "A" SILT FENCE & INSTLLATION

GMC

2660 Eastchase Lane
Suite 200
Montgomery, AL 36117
T 334.271.3200

1" 0" 5" 1"

ISSUE	DATE
90% SUBMITTAL	01.24.2025
ISSUED FOR BID	03.14.2025
CONFORMED SET:	

PROJECT MANGER: JP
ENGINEER: DT
DESIGNER: DT
DRAWN BY: HKD/FN

COUNTY RD 29 WATER TREATMENT PLANT
PRATTVILLE WATER WORKS
PRATTVILLE, AL

CMGM230095

ALABAMA LICENSED 03/18/2025 No. 36869 PROFESSIONAL ENGINEER BRYSTIN ALLEN TILL

CIVIL DETAILS

C-901

DRAWING FILE: C:\Users\dtill\DC\ACCDocs\GMC\Prattville WTP on CR 29\CAD Files\DWG\02 Sheets\03 Civil\C-901.dwg
PLOTTED: Apr 01, 2025 - 3:26pm

This drawing is and shall remain the property of Goodwyn, Mills and Cawood, Inc. (GMC) and Goodwyn Mills Cawood LLC (GMC). Unauthorized use of any kind including use on other projects is prohibited. In the event that a conflict arises between the sealed drawings and the electronic files, the sealed drawings will govern.

	TAG	SERVICE	TYPE	SIZE (INCHES)	CONNECTIONS	OPERATOR	NOTES
	V1101	RW	BALL	1/2	THD	LEVER	
	V1102	RW	BALL	1	THD	LEVER	
	V1103	RW	AIR RELEASE	1	THD	N/A	
	V1104	RW	BALL	1/4	THD	LEVER	PRESSURE GAUGE
	V1105	RW	SWING CHECK	8	FLG	N/A	
	V1106	RW	BUTTERFLY	8	FLG	HANDWHEEL	
	V1107	RW	BUTTERFLY	8	FLG	HANDWHEEL	
	V1108	PSW	SOLENOID	1	THD	ELECTRIC	
1000	V1109	PSW	PRESSURE REDUCING	1	THD	N/A	
	V1110	PSW	BALL	1	THD	LEVER	
	V1201	RW	BALL	1/2	THD	LEVER	
	V1202	RW	BALL	1	THD	LEVER	
	V1203	RW	AIR RELEASE	1	THD	N/A	
	V1204	RW	BALL	1/4	THD	LEVER	PRESSURE GAUGE
	V1205	RW	SWING CHECK	10	FLG	N/A	
	V1206	RW	BUTTERFLY	10	FLG	HANDWHEEL	
	V1207	RW	BUTTERFLY	10	FLG	HANDWHEEL	
	V6011	TW	GLOBE CHECK	10	FLG	N/A	
	V6012	TW	BUTTERFLY	10	FLG	HANDWHEEL	
	V6013	TW	BALL	2	THD	LEVER	
	V6014	TW	AIR RELEASE	2	THD	N/A	
	V6015	TW	BALL	1/4	THD	LEVER	PRESSURE GAUGE
	V6021	TW	GLOBE CHECK	10	FLG	N/A	
	V6022	TW	BUTTERFLY	10	FLG	HANDWHEEL	
	V6023	TW	BALL	2	THD	LEVER	
	V6024	TW	AIR RELEASE	2	THD	N/A	
6000	V6025	TW	BALL	1/4	THD	LEVER	PRESSURE GAUGE
	V6031	TW	GLOBE CHECK	10	FLG	N/A	
	V6032	TW	BUTTERFLY	10	FLG	HANDWHEEL	
	V6033	TW	BALL	2	THD	LEVER	
	V6034	TW	AIR RELEASE	2	THD	N/A	
	V6035	TW	BALL	1/4	THD	LEVER	PRESSURE GAUGE
	V6101	TW	BALL	1/4	THD	LEVER	PRESSURE GAUGE
	V6201	PSW	GATE	3	FLG	NUT	
	V6202	PSW	PRESSURE REGULATING	3	FLG	N/A	
	V6203	PSW	BALL	1/4	THD	LEVER	PRESSURE GAUGE

	TAG	SERVICE	TYPE	SIZE (INCHES)	CONNECTIONS	OPERATOR	NOTES
	SV8016	PSW	SOLENOID	1	THD	ELECTRIC	PROVIDED BY EQUIPMENT VENDOR
	V8021	SAS	BALL	1	THD	LEVER	
	V8022	SAS	CHECK	1	THD	N/A	
	V8023	SAS	BALL	1	THD	LEVER	
	V8031	SAS	BALL	1	THD	LEVER	
	V8032	SAS	CHECK	1	THD	N/A	
	SV8081	AIR	SOLENOID	3/8	THD	ELECTRIC	PROVIDED BY EQUIPMENT VENDOR
	SV8082	AIR	SOLENOID	3/8	THD	ELECTRIC	PROVIDED BY EQUIPMENT VENDOR
	V8101	PSW	BALL	1	THD	LEVER	
	V8102	PSW	PRESSURE REGULATING	1	THD	N/A	
	V8103	PSW	BALL	1	THD	LEVER	
8000	SV8104	PSW	SOLENOID	1	THD	ELECTRIC	
	V8105	PSW	BALL	1	THD	LEVER	
	V8106	PSW	BALL	1	THD	LEVER	
	V8107	PSW	BALL	1/4	THD	LEVER	PRESSURE GAUGE
	V8108	CLS	BALL	1	THD	LEVER	
	V8113	CLS	CHECK	1	THD	N/A	PROVIDED WITH INJECTION QUILL
	V8114	CLS	BALL	1	THD	LEVER	PROVIDED WITH INJECTION QUILL
	V8207	HF	CHECK	1/2	THD	N/A	PROVIDED WITH INJECTION QUILL
	V8208	HF	BALL	1/2	THD	LEVER	PROVIDED WITH INJECTION QUILL
	V8307	PHOS	CHECK	1/2	THD	N/A	PROVIDED WITH INJECTION QUILL
	V8308	PHOS	BALL	1/2	THD	LEVER	PROVIDED WITH INJECTION QUILL

GMC

2660 Eastchase Lane
Suite 200
Montgomery, AL 36117
T 334.271.3200

1" 5" 0" 1"

ISSUE	DATE
90% SUBMITTAL	01.24.2025
ISSUED FOR BID	03.14.2025
CONFORMED SET:	

PROJECT MANGER:	JP
ENGINEER:	DT
DESIGNER:	DT
DRAWN BY:	HKD/FN

COUNTY RD 29 WATER TREATMENT PLANT
PRATTVILLE WATER WORKS
PRATTVILLE, AL

CMGM230095

ALABAMA LICENSED 03/18/2025 No. 36869 PROFESSIONAL ENGINEER JUSTIN ALLEN TILL

VALVE SCHEDULE

D-911

DRAWING FILE: C:\Users\dtill\DC\ACCDocs\GMC\Prattville WTP on CR 29\CAD Files\DWG\02 Sheets\10 Process\D-911 VALVE SCHEDULE.dwg
PLOTTED: Apr 01, 2025 - 1:47pm

This drawing is and shall remain the property of Goodwyn, Mills and Cawood, Inc. (GMC) and Goodwyn Mills Cawood LLC (GMC). Unauthorized use of any kind including use on other projects is prohibited. In the event that a conflict arises between the sealed drawings and the electronic files, the sealed drawings will govern.

SCHEMATIC DIAGRAM SYMBOLS:

	CONDUCTORS CONNECTED
	CONDUCTORS NOT CONNECTED
	CONNECTION POINT
XX	TERMINAL POINT FOR OUTGOING CONDUCTORS, WITH IDENTIFICATION. "XX" DENOTES CONTRACTOR ASSIGNED.
MCPXXX–XX XXA	MAGNETIC–ONLY CIRCUIT BREAKER (MCP), WITH CURRENT RATING
CBXXX–XX XXA	CIRCUIT BREAKER, THERMAL–MAGNETIC UNLESS OTHERWISE NOTED, WITH FRAME SIZE AND TRIP RATING
FUXXX–XX XXA	FUSE WITH SIZE AND OPTIONAL IDENTIFICATION.
DSXXX–XX XXXA	DISCONNECT SWITCH. RATING OPTIONAL. 30 AMP, 600V RATED MINIMUM UNLESS OTHERWISE NOTED.
FUXXX–XX XXA	FUSE DISCONNECT SWITCH. RATING OPTIONAL. 30 AMP, 600V MINIMUM UNLESS OTHERWISE NOTED.
M–XXX XX	MOTOR (HP AS SHOWN, PHASES AS REQUIRED)
MSR–XXX XX XX	MOTOR STARTER COIL
OL–XXX	THERMAL MOTOR OVERLOAD
M–XXX	MOTOR CONTACT
LSXXX–XX LSXXX–XX	LIMIT SWITCH NORMALLY CLOSED AND NORMALLY OPEN
PSXXX–XX PSXXX–XX	PRESSURE SWITCH NORMALLY CLOSED AND NORMALLY OPEN
TSXXX–XX TSXXX–XX	TEMPERATURE SWITCH NORMALLY CLOSED AND NORMALLY OPEN
FSXXX–XX FSXXX–XX	FLOW SWITCH NORMALLY CLOSED AND NORMALLY OPEN
FLTXXX–XX FLTXXX–XX	LEVEL SWITCH NORMALLY CLOSED AND NORMALLY OPEN
PRSXXX–XX PRSXXX–XX	PROXIMITY SWITCH NORMALLY CLOSED AND NORMALLY OPEN
PCSXXX–XX PCSXXX–XX	PULLCORD SWITCH NORMALLY CLOSED AND NORMALLY OPEN
SVXXX–XX	SOLENOID VALVE
PBXXX–XX PBXXX–XX	MOMENTARY PUSHBUTTON NORMALLY CLOSED AND NORMALLY OPEN
SSXXX–XX SSXXX–XX OX OX	SELECTOR SWITCH NORMALLY NORMALLY CLOSED AND NORMALLY OPEN
LTXXX–XX X	PILOT LIGHT X = LENS COLOR — A = AMBER, B = BLUE, G = GREEN, R = RED, W = WHITE
CRXXX–XX	CONTROL RELAY
CRXXX–XX CRXXX–XX	CONTROL RELAY CONTACT NORMALLY CLOSED AND NORMALLY OPEN
ALXXX–XX	ALARM LIGHT
AHXXX–XX	ALARM HORN
H1 H2 TFRXXX–XX X1 X2	CONTROL POWER TRANSFORMER, PRIMARY AND SECONDARY VOLTAGE SHOWN. SIZE AS SHOWN OR SPECIFIED.
C.T. CTXXX–XX	CURRENT TRANSFORMER. PRIMARY/SECONDARY TURNS RATIO AS SHOWN.

FIRE ALARM SYMBOLS:

S	SMOKE DETECTOR, 120VAC RATED

ONE LINE DIAGRAM SYMBOLS:

CB–XXX	LOW VOLTAGE POWER CIRCUIT AND BREAKER DRAWOUT TYPE, FRAME TRIP SHOWN
CB–XXX	MOLDED CASE CIRCUIT BREAKER, FRAME AND TRIP ID SHOWN
	LIGHTNING ARRESTOR AND GROUND
DS–XXX	DISCONNECT OR ISOLATING SWITCH: CONTINUOUS RATING SHOWN
MCP–XXX	MAGNETIC–ONLY CIRCUIT BREAKER (MCP), DRAWOUT TYPE, WITH CURRENT RATING
FS–XXX	FUSED SWITCH: FUSE AND SWITCH CONTINUOUS RATINGS SHOWN
TFR–XXX	POWER TRANSFORMER: PRIMARY & SECONDARY VOLTAGES, %Z, SIZE SHOWN
XS	CURRENT TRANSFORMER: RATIO SHOWN (3 INDICATES NO. OF CT'S) METER SWITCH, xS: AS – AMMETER SWITCH VS – VOLTMETER SWITCH FS – FREQUENCY SWITCH
PT	POTENTIAL TRANSFORMER PRIMARY & SECONDARY VOLTAGES & WINDINGS SHOWN. (x) UNITS
METER	METER: A – AMMETER; W – WATTMETER; KWH – WATT–HOUR METER; F – FREQUENCY METER; VAR – VAR METER; V – VOLTMETER
FVNR SIZE X	FULL VOLTAGE, NON–REVERSING MAGNETIC MOTOR STARTER. NEMA SIZE INDICATED
FVR SIZE X	FULL VOLTAGE, REVERSING MAGNETIC MOTOR STARTER. NEMA SIZE INDICATED
XXHP VFD–XXX	VARIABLE FREQUENCY DRIVE. NEMA SIZE INDICATED
XXHP RVSS–XXX	REDUCED VOLTAGE SOLID STATE DRIVE (SOFT START). NEMA SIZE INDICATED
XX M–XXX	MOTOR (HP AS SHOWN, PHASES AS REQUIRED)
	GENERATOR RECEPTACLE
N E MTS–XXX	MANUAL TRANSFER SWITCH
P–XXX–X	CABLE TAG: P – POWER CABLE; C – CONTROL CABLE; S – SHIELDED SIGNAL CABLE
Gx	GENERATOR TAG: G – EQUIPMENT TO RUN OFF GENERATOR; X – STEP NUMBER FOR EQUIPMENT STARTING OFF THE GENERATOR

CIRCUIT AND RACEWAY SYMBOLS:

————	RACEWAY OR WIRING SYSTEM ABOVE FLOOR LEVEL BELOW CEILING, EXPOSED. (UNLESS OTHERWISE NOTED)
- - - - - -	RACEWAY OR WIRING SYSTEM BELOW FLOOR LEVEL, ABOVE CEILING, HIDDEN, OR EXISTING CABLE/CONDUIT. (UNLESS OTHERWISE NOTED)
— — — —	SCHEMATIC DIAGRAM FIELD WIRING. (UNLESS OTHERWISE NOTED)
—— – – ——	ONE LINE DIAGRAM EQUIPMENT ENCLOSURE. (UNLESS OTHERWISE NOTED)
PBD A–1,3,5	HOME RUN – SEE PANELBOARD SCHEDULE FOR CIRCUIT INFORMATION
	EXAMPLE: HOME TO PANELBOARD PBD A, CIRCUITS 1, 3, AND 5

GENERAL ABBREVIATIONS:

AR	ALARM RELAY	M	MOTOR CONTACTOR
AS	AMMETER SELECTOR SWITCH	mA	MILLIAMPERE
A, AMP	AMP(S), AMPERE(S)	MAX	MAXIMUM
AC	ALTERNATING CURRENT	MCB	MAIN CIRCUIT BREAKER
AFF	ABOVE FINISHED FLOOR	MCC	MOTOR CONTROL CENTER
AHAP	AS HIGH AS POSSIBLE	MCP	MOTOR CONTROL PANEL/MOTOR CIRCUIT PROTECTOR
AIC	AMPS INTERRUPTING CAPACITY, SYMM.	MECH	MECHANICAL
AL	ALUMINUM	MFR	MANUFACTURE(R)
AT	AMPERE TRIP	MH	MANHOLE
AF	AMPERE FRAME	MIC	MICROPHONE
AUTO	AUTOMATIC	MIN	MINIMUM
AUX	AUXILIARY	MISC	MISCELLANEOUS
AWG	AMERICAN WIRE GAUGE	mM	MILLIMETER
BC	BARE COPPER CONDUCTOR	mV	MILLIVOLT
BKR	BREAKER	MCM	MILLI CIRCULAR MILLS
C	CONDUCTOR/CONTACTOR	MOP	MOTOR OPERATOR PANEL
CB	CIRCUIT BREAKER	MPR	MOTOR PROTECTION RELAY
CJB	CIRCUIT JUNCTION BOX	MCB	MAIN CIRCUIT BREAKER
CKT	CIRCUIT	MTR	MOTOR
CLG	CEILING	MVS	MEDIUM VOLTAGE STARTER
CR	CONTROL RELAY	N/A	NOT APPLICABLE
CND	CONDUIT	NC	NORMALLY CLOSED
CONC	CONCRETE	NEUT,N	NEUTRAL
CS	CONTROL SWITCH	NF	NON–FUSED
CONT	CONTROL	NIC	NOT IN CONTRACT
CPT	CONTROL POWER TRANSFORMER	NO	NORMALLY OPEN
CT	CURRENT TRANSFORMER	NOM	NOMINAL
CU	COPPER	NP	NAMEPLATE
D	DIAMETER	NTS	NOT TO SCALE
DB	DUCT BANK	OC	ON CENTER
DC	DIRECT CURRENT	OD	OUTSIDE DIAMETER
DET	DETAIL	OH	OVERHEAD
DIAG	DIAGRAM	OL's	OVERLOADS
DPSH	DIFFERENTIAL PRESSURE SWITCH	OT	OIL TIGHT
DS	DISCONNECT SWITCH	P	POLE
DWG	DRAWING	PA	PUBLIC ADDRESS
EA	EACH	PB	PUSHBUTTON, PULLBOX
EC	ELECTRICAL CONTRACTOR	PE	PHOTO ELECTRIC CELL
EF	EXHAUST FAN	PF	POWER FACTOR
EL	ELEVATION	PH	PHASE
ELEC	ELECTRIC(AL)	PJB	POWER JUNCTION BOX
EMER	EMERGENCY	PLC	PROGRAMMABLE LOGIC CONTROLLER
ENCL	ENCLOSURE/ENCLOSED	PNL	PANEL
EP	EXPLOSION PROOF EQUIP.	PP	POWER PANEL
EX, E	EXISTING	PR	PAIR
FCP	FURNISHED WITH EQUIPMENT PANEL	PRI	PRIMARY
FDR	FEEDER	PS	PRESSURE SWITCH
FLA	FULL LOAD AMPS	PT	POTENTIAL TRANSFORMER
FPP	FIBER OPTIC DISTRIBUTION PANEL	PVC	POLYVINYL CHLORIDE
FS	FLOW SWITCH	PWR	POWER
FU	FUSE	QSH	SHEAR PIN LIMIT SWITCH
FUT	FUTURE	RCPT	RECEPTACLE
FVNR	FULL VOLTAGE NON–REVERSING	RCT	REACTOR
FVR	FULL VOLTAGE REVERSING	REF	REFERENCE REQ'D REQUIRED
GALV	GALVANIZED	RMS	ROOT MEAN SQUARE
GEN	GENERATOR	RTD	RESISTANCE TEMPERATURE DETECTOR
GFR	GROUND FAULT RELAY	SCH	SCHEDULE
GRD	GROUND	RVAT	REDUCED VOLTAGE AUTO TRANSFORMER TYPE STARTER
GRS	GALVANIZED RIGID STEEL	SE	SPEED SENSOR
H	HIGH	SEC	SECONDARY
HGT	HEIGHT	SEL	SELECTOR
HH	HANDHOLE	SER	SERVICE ENTRANCE RATED
HID	HIGH INTENSITY DISCHARGE	SPDT	SINGLE POLE DOUBLE THROW
HP	HORSEPOWER	SPEC	SPECIFICATION
HS	HAND STATION (SWITCH)	SPHTR	MOTOR SPACE HEATER
HVAC	HEATING, VENTILATION AND AIR CONDITIONING	SPKR	SPEAKER
HZ	HERTZ (CYCLES PER SECOND)	SS	STAINLESS STEEL
HOA	HAND/OFF/AUTO	SSL	SPEED SWITCH
HOR	HAND/OFF/REVERSE	SUB	SUBSTATION
HMH	HIGH VOLTAGE MANHOLE	SW	SWITCH
ID	INSIDE DIAMETER	SYMM	SYMMETRICAL
IMC	INDIVIDUAL MOTOR CONTROLLER	SYS	SYSTEM
INTLK	INTERLOCK	SV	SOLENOID OPERATED VALVE
INST	INSTANTANEOUS	SPB	SIGNAL PULL BOX
INSTR	INSTRUMENT	TB	TERMINAL BOX
I/O	INPUT–OUTPUT	TEL	TELEPHONE
JB	JUNCTION BOX	TEMP	TEMPERATURE
KV	KILOVOLT	TFR	TRANSFORMER
KVA	KILOVOLT–AMPERE	TH	THERMOSTAT
KVAR	KILOVOLT–AMPERE REACTIVE	TJB	TERMINAL JUNCTION BOX
KW	KILOWATT	TSH	TEMPERATURE SWITCH HIGH
KWH	KILOWATT–HOUR	TV	TELEVISION
KAIC	KILO AMPERE INTERRUPTING CURRENT	TYP	TYPICAL
L–O–R	LOCAL–OFF–REMOTE	TR	TIMING RELAY
L	LONG	TVSS	TRANSIENT VOLTAGE SURGE SUPPRESSOR
LC	LIGHTING CONTACTOR	TSP	TWISTED SHIELDED PAIR
LCP	LOCAL CONTROL PANEL	UG	UNDERGROUND
LP	LIGHTING PANEL	UH	UNIT HEATER
LOS	LOCK–OUT STOP	UON	UNLESS OTHERWISE NOTED
LSIG	LONG, SHORT, INSTANTANEOUS TRIP SETTING AND GROUND FAULT PROTECTION	V	VOLT
		VA	VOLT AMPERE
LSL	LEVEL SWITCH LOW	VAR	VOLT AMPERE REACTIVE
LSO	LIMIT SWITCH OPEN	VFD	VARIABLE FREQUENCY DRIVE
LSC	LIMIT SWITCH CLOSED	VSH	VIBRATION SWITCH
LTG	LIGHTING	W	WATT, WIRE, WIDE
LV	LOW VOLTAGE	W/	WITH
LSH	LEVEL SWITCH HIGH	W/O	WITHOUT
		WE	WEIGHT LOAD CELL
		WIT	WEIGHT INDICATING TRANSMITTER
		WP	WEATHERPROOF
		XL	WARNING HORN/LIGHT
		XT	ANEMOMETER
		ZS	POSITION (LIMIT) SWITCH
		ZSO	POSITION (LIMIT) SWITCH OPEN
		ZSC	POSITION (LIMIT) SWITCH CLOSED
		ZT	POSITION TRANSMITTER

GROUNDING SYMBOLS:

	GROUND ROD, 3/4" x 10'–0", COPPERCLAD (UNLESS OTHERWISE NOTED)
	GROUND ROD AND TEST WELL
	COMPRESSION TYPE GROUNDING BOND TO MOTOR CASING OR EQUIPMENT
	EXOTHERMIC TYPE GROUNDING BOND TO CABLE OR CONCRETE REBAR OR RISER
G G	GROUNDING CONDUCTOR (CONCEALED), #4/0 AWG BARE COPPER (UNLESS OTHERWISE NOTED)
GG GG GG	GROUNDING CONDUCTOR (EXPOSED), #4/0 AWG INSULATED COPPER (UNLESS OTHERWISE NOTED)

GENERAL NOTES:

1. SCOPE:
   A. FURNISH ALL LABOR, MATERIAL, EQUIPMENT AND TOOLS REQUIRED TO COMPLETE INSTALLATION OF THE ELECTRICAL SYSTEM INCLUDING BUT NOT LIMITED TO WIRING, BOXES, LIGHT FIXTURES, PANELS, SWITCHES, RECEPTACLES, DISCONNECTS, STARTERS, AND ALL OTHER WORK INDICATED ON THE DRAWINGS OR AS SPECIFIED HEREIN.
   B. OBTAIN ALL PERMITS, INSPECTIONS, AND APPROVALS AS REQUIRED BY THE LOCAL AUTHORITIES HAVING JURISDICTION AND DELIVER CERTIFICATE OF APPROVAL TO THE GENERAL CONTRACTOR. ALL ASSOCIATED FEES SHALL BE PAID BY THE CONTRACTOR.
   C. ALL MATERIALS AND EQUIPMENT OF THE ELECTRICAL SYSTEM NECESSARY FOR ITS PROPER AND SAFE OPERATION OR OTHERWISE REQUIRED BY CODE, BUT NOT SPECIFICALLY MENTIONED OR SHOWN ON THE DRAWINGS, SHALL BE FURNISHED AND INSTALLED WITHOUT ADDITIONAL CHARGE.
   D. WORK SHALL BE INSTALLED IN ACCORDANCE WITH THE LATEST EDITION OF NATIONAL ELECTRICAL CODE, THE LATEST STANDARD BUILDING CODE, ANY OTHER LOCALLY ADOPTED CODES AND LOCAL AUTHORITIES HAVING JURISDICTION.
2. ALL SUBSTITUTIONS FOR EQUIPMENT AND MATERIAL SHALL BE SUBMITTED TO THE ENGINEER FOR REVIEW PRIOR TO PURCHASING.
3. CONTRACTOR SHALL COORDINATE ALL WORK WITH ALL OTHER TRADES. IT IS THE RESPONSIBILITY OF CONTRACTOR TO VERIFY THE ACTUAL LOCATION OF EQUIPMENT, DUCTWORK, PIPING, ETC. AND COORDINATED THE INSTALLATION ACCORDINGLY. THE EQUIPMENT WIRING SHALL INCLUDE ALL NECESSARY CABLES AND CONDUIT REQUIRED FOR THE PROPER AND SAFE EQUIPMENT OPERATION.
4. CONTRACTOR SHALL CONFIRM ALL DIMENSIONS AND DISTANCES IN THE FIELD. IN CASE OF DISCREPANCY, CONTRACTOR SHALL INCLUDE A MORE EXPENSIVE OPTION.
5. ALL MATERIALS SELECTION SHALL BE AS PER THE SCHEDULE SHOWN ON DWG. E–002, UNLESS NOTED OTHERWISE ON THE DRAWINGS.

PLAN DRAWING SYMBOLS:

M	MOTOR CONNECTION
	MOTOR STARTER, INDIVIDUAL –– NOT LOCATED IN AN MCC OR SIMILAR GROUP ASSEMBLY
	COMBINATION MOTOR STARTER/DISCONNECT INDIVIDUAL –– NOT LOCATED IN AN MCC OR SIMILAR GROUP ASSEMBLY
	DISCONNECT SWITCH. DISCONNECT SWITCHES ARE HEAVY DUTY, SINGLE THROW, WITH NEMA 4X ENCLOSURE UNLESS OTHERWISE NOTED. MOUNT AT 4'–8" TO CENTER OF DISCONNECT.
	FUSED DISCONNECT, NON–FUSED. PROVISION FOR CLASS R FUSES.
	FIELD INSTRUMENT CONNECTION
	START/STOP HAND STATION MOUNTED TO HANDRAIL (NEMA 4X UNLESS OTHERWISE NOTED)
$X	120V, 20A, 1P TOGGLE SWITCH — [BLANK] = 1P TOGGLE SWITCH; 2 = 2P TOGGLE SWITCH; 3 = 3P TOGGLE SWITCH; D = SLIDE DIMMER; M = MOTOR RATED; S = TOGGLE WITH OCCUPANCY SENSOR
	DUPLEX 120V RECEPTACLE, 120V, 20A, 1P. MOUNT 6" ABOVE COUNTER, DESK, OR CABINET.
	GFCI DUPLEX 120V RECEPTACLE, 120V, 20A, 1P. MOUNT 6" ABOVE COUNTER, DESK, OR CABINET.
	QUADRAPLEX 120V RECEPTACLE, 120V, 20A, 1P. MOUNT 6" ABOVE COUNTER, DESK, OR CABINET.
	GFCI QUADRAPLEX 120V RECEPTACLE, 120V, 20A, 1P. MOUNT 6" ABOVE COUNTER, DESK, OR CABINET.
	240/120V TWIST–LOCK RECEPTACLE, 30A, 5W (U.N.O.) MOUNT 6" ABOVE COUNTER, DESK, OR CABINET
	TELEPHONE BOX. MOUNT 18" A.F.F., INSTALL A 1/2" CONDUIT FROM BOX TO 6" ABOVE CEILING. PROVIDE PULL CORD FOR FUTURE CONNECTIONS AS REQUIRED.
	ETHERNET CAT–6 BOX. MOUNT 18" A.F.F., INSTALL A 1/2" CONDUIT FROM BOX TO 6" ABOVE CEILING. PROVIDE PULL CORD FOR FUTURE CONNECTIONS AS REQUIRED.
JB	JUNCTION BOX
	RECESSED FLOOR JUNCTION BOX
	60A, 480V, 3PH RECEPTACLE WITH INTERLOCKED 60A (NEMA 4X FUSED DISCONNECT SWITCH UNLESS OTHERWISE NOTED)
	EXHAUST FAN
	CCTV CAMERA

EDEC, INC.
4120 CHATTAHOOCHEE TRACE
SUITE A
DULUTH, GEORGIA 30097
TEL. (770) 493-8685

GMC
2660 Eastchase Lane
Suite 200
Montgomery, AL 36117
T 334.271.3200

ISSUE	DATE
ISSUED FOR BID	03-15-25
DESIGNER:	DV
DRAWN BY:	DV

COUNTY RD 29 WATER TREATMENT PLANT
PRATTVILLE WATER WORKS
PRATTVILLE, AL

CMGM230095

ALABAMA LICENSED No. 30192 PROFESSIONAL ENGINEER ALEC ZAYCHIK

ELECTRICAL LEGEND & GENERAL NOTES

E-001

This drawing is and shall remain the property of Goodwyn, Mills and Cawood, Inc. (GMC) and Goodwyn Mills Cawood LLC (GMC). Unauthorized use of any kind including use on other projects is prohibited. In the event that a conflict arises between the sealed drawings and the electronic files, the sealed drawings will govern.

ELECTRICAL EQUIPMENT MATERIALS RATING								
		INSTALLATION AREA AND DESIGN CRITERIA						
NO.	EQUIPMENT	INDOOR NON–PROCESS; EXPOSED INSTALLATION (ELECTRICAL & CONTROL ROOMS, OFFICES, LAB, UNDER RAISED FLOORS, ETC.) ENVIRONMENT: NON–CORROSIVE; DRY	INDOOR PROCESS (PIPING GALLERY, PUMPS ROOM, ETC.) ENVIRONMENT: CORROSIVE; DAMP	INDOOR CHEMICAL ROOM ENVIRONMENT: CORROSIVE; DAMP	OUTDOOR CHEMICALS STORAGE AREA ENVIRONMENT: CORROSIVE; WET	OUTDOOR GENERAL AREAS ENVIRONMENT: CORROSIVE; WET	BELOW GRADE VAULTS (METERING VAULT, VALVE VAULT, ETC.) ENVIRONMENT: CORROSIVE; WET	UNDERGROUND AND DIRECT BURIED ENVIRONMENT: CORROSIVE; WET
1	RIGID CONDUITS	RMC – ALUMINUM	RMC – ALUMINUM	PVC COATED ALUMINUM	PVC COATED ALUMINUM	RMC – ALUMINUM	RMC – ALUMINUM	DIRECT BURIED – PVC 40; CONCRETE ENCASED – PVC 40.
2	FLEXIBLE CONDUITS	LIQUIDTIGHT FLEXIBLE METALLIC CONDUIT (LFMC)	LIQUIDTIGHT FLEXIBLE METALLIC CONDUIT (LFMC)	LIQUIDTIGHT FLEXIBLE METALLIC CONDUIT (LFMC)	LIQUIDTIGHT FLEXIBLE METALLIC CONDUIT (LFMC)	LIQUIDTIGHT FLEXIBLE METALLIC CONDUIT (LFMC)	LIQUIDTIGHT FLEXIBLE METALLIC CONDUIT (LFMC)	N/A
3	CABLE TRAYS	LADDER TYPE – ALUMINUM	LADDER TYPE – ALUMINUM	FIBERGLASS REINFORCED PLASTIC	FIBERGLASS REINFORCED PLASTIC	LADDER TYPE – ALUMINUM	LADDER TYPE – ALUMINUM	N/A
4	JUNCTION BOXES	STEEL – NEMA 1	STEEL – NEMA 12	NEMA 4X, TYPE 316 SS	NEMA 4X, TYPE 316 SS	STEEL – NEMA 3R	STEEL – NEMA 4	POLYMER CONCRETE
5	PULL BOXES	STEEL – NEMA 1	STEEL – NEMA 12	NEMA 4X, TYPE 316 SS	NEMA 4X, TYPE 316 SS	STEEL – NEMA 3R	STEEL – NEMA 4	POLYMER CONCRETE
6	EQUIPMENT RACKS/SUPPORTS/HARDWARE	ALUMINUM	ALUMINUM	STAINLESS STEEL 316	STAINLESS STEEL 316	ALUMINUM	ALUMINUM	STAINLESS STEEL 304
7	FASTENERS	ALUMINUM	ALUMINUM	STAINLESS STEEL 316	STAINLESS STEEL 316	ALUMINUM	ALUMINUM	STAINLESS STEEL 304
8	SWITCHGEAR	NEMA 1	N/A	N/A	N/A	NEMA 3R	N/A	N/A
9	SWITCHBOARD	NEMA 1	N/A	N/A	N/A	NEMA 3R	N/A	N/A
10	MOTOR CONTROL CENTER	NEMA 1	N/A	N/A	N/A	NEMA 3R	N/A	N/A
11	PANELBOARDS	NEMA 1	NEMA 12	NEMA 4X, TYPE 316 SS	NEMA 4X, TYPE 316 SS	NEMA 3R	N/A	N/A
12	DRY TYPE TRANSFORMERS	NEMA 2	NEMA 3R	NEMA 4X, TYPE 316 SS	NEMA 4X, TYPE 316 SS	NEMA 3R	N/A	N/A
13	DISCONNECT SWITCHES	NEMA 1	NEMA 12	NEMA 4X, TYPE 316 SS	NEMA 4X, TYPE 316 SS	NEMA 3R	NEMA 4	N/A
14	MOTOR STARTERS	NEMA 1	NEMA 12	NEMA 4X, TYPE 316 SS	NEMA 4X, TYPE 316 SS	NEMA 3R	NEMA 4	N/A
15	CONTACTORS	NEMA 1	NEMA 12	NEMA 4X, TYPE 316 SS	NEMA 4X, TYPE 316 SS	NEMA 3R	NEMA 4	N/A
16	CONTROL PANELS	NEMA 1	NEMA 12	NEMA 4X, TYPE 316 SS	NEMA 4X, TYPE 316 SS	NEMA 3R	N/A	N/A
17	MOTOR HOUSING MINIMUM PROTECTION RATING	ODP	TEFC	TEFC	TEFC	TEFC	TEFC	N/A
18	INSTRUMENTATION MINIMUM PROTECTION RATING	NEMA 1	NEMA 4	NEMA 4X	NEMA 4X	NEMA 4	NEMA 4	NEMA 6P
19	VALVE ACTUATORS	N/A	NEMA 4	NEMA 4	NEMA 4	NEMA 4	NEMA 6P	N/A
20	WIRING DEVICE BOXES	DIE–CAST ALUMINUM; WEATHERPROOF	DIE–CAST ALUMINUM; WEATHERPROOF	ALUMINUM, PVC COATED; WEATHERPROOF	ALUMINUM, PVC COATED; WEATHERPROOF	DIE–CAST ALUMINUM; WEATHERPROOF	DIE–CAST ALUMINUM; WEATHERPROOF	N/A
21	DEVICES COVER PLATES	STAINLESS STEEL; NON–WEATHERPROOF (WITH GASKET)	DIE–CAST ALUMINUM; WEATHERPROOF (WITH GASKET)	ALUMINUM, PVC COATED; WEATHERPROOF (WITH GASKET)	ALUMINUM, PVC COATED; WEATHERPROOF (WITH GASKET)	DIE–CAST ALUMINUM; WEATHERPROOF	DIE–CAST ALUMINUM; WEATHERPROOF	N/A
22	OUTLET BOX HOODS	N/A	ALUMINUM; WEATHERPROOF (WHILE–IN–USE COVER) (WITH GASKET)	PLASTIC; WEATHERPROOF (WHILE–IN–USE COVER) (WITH GASKET)	PLASTIC; WEATHERPROOF (WHILE–IN–USE COVER) (WITH GASKET)	ALUMINUM; WEATHERPROOF (WHILE–IN–USE COVER) (WITH GASKET)	ALUMINUM; WEATHERPROOF (WHILE–IN–USE COVER) (WITH GASKET)	N/A

CABLE TYPES REQUIREMENTS						
	MATERIAL	SERVICE ENTRANCE	VFD MOTOR FEEDERS	POWER	CONTROL	SIGNAL
CABLE TYPES	COPPER, UNLESS NOTED OTHERWISE	XHHW, 600V	SHIELDED VFD CABLES, 1000V	THWN–2, 600V	THWN–2, 600V	SHIELDED TWISTED TYPE, 600V

NOTES:

1. POWER CABLES REQUIREMENTS:
   - 1.1. MINIMUM ALLOWED WIRE GAUGE: #12 AWG.
   - 1.2. MAXIMUM ALLOWED WIRE GAUGE: 600KCMIL.
   - 1.3. MAXIMUM MULTICONDUCTOR CABLES SIZE: #1 AWG.
   - 1.4. MAXIMUM SOLID CORE CABLES SIZE: #10 AWG.
2. CONTROL CABLES REQUIREMENTS:
   - 2.1. CABLES CONSTRUCTION TYPE: SINGLE CONDUCTOR.
   - 2.2. MINIMUM ALLOWED WIRE GAUGE: #14 AWG.
3. SIGNAL CABLES REQUIREMENTS:
   - 3.1. CABLES CONSTRUCTION TYPE: MULTICONDUCTOR CONDUCTOR WITH OVERALL SHIELD AND DRAIN WIRE.
   - 3.2. MINIMUM ALLOWED WIRE GAUGE: #16 AWG.
   - 3.3. MAXIMUM NUMBER OF PAIRS/TRIADS IN MULTI–PAIR/TRID CABLE: 2.
4. GENERAL REQUIREMENTS:
   - 4.1. ALL CABLES INSTALLED IN CABLE TRAYS SHALL BE TC RATED.

INSTALLATION REQUIREMENTS:

GENERAL:

1. ALL ELECTRICAL EQUIPMENT AND MATERIALS SHALL BE UL LISTED.
2. ALL ELECTRICAL EQUIPMENT AND MATERIALS INSTALLED OUTDOORS SHALL BE UV RESISTANT.
3. ALL ELECTRICAL EQUIPMENT AND MATERIALS OF THE SAME TYPE SHALL BE OF THE SAME MANUFACTURER AND MODEL LINE.
4. ALL FREESTANDING EQUIPMENT SHALL BE INSTALLED ON 4" HOUSEKEEPING PAD, ELEVATED ABOVE THE SURROUNDING SURFACE.
5. ALL ELECTRICAL, INSTRUMENTATION AND CONTROL SYSTEM COMPONENTS LOCATIONS SHALL BE ADJUSTED TO PROVIDE NEC REQUIRED WORKING CLEARANCES.
6. ALL ELECTRICAL EQUIPMENT INSTALLED OUTDOORS SHALL HAVE CONCRETE PADS EXTENDING 4 FT IN FRONT OF THE EQUIPMENT.
7. CONTRACTOR SHALL ADJUST CIRCUIT BREAKER SIZES, CABLES AND CONDUITS FOR ELECTRICAL EQUIPMENT AT NO ADDITIONAL COST BASED ON THE ACTUAL ACCEPTED SHOP DRAWINGS.
8. CONTRACTOR SHALL CONFIRM ELECTRICAL EQUIPMENT DIMENSIONS PRIOR TO RELEASING FOR FABRICATION LOCATED IN THE AREAS WITH LIMITED AVAILABLE SPACE TO ENSURE PROPER EQUIPMENT INSTALLATION PROVIDING NEC REQUIRED WORKING CLEARANCES.
9. FOR NEW CONSTRUCTION, INSTALLATION AND/OR DEMOLITION THAT INTERRUPTS ANY POWER, CONTROL OR SIGNAL WIRING TO EXISTING EQUIPMENT OR DEVICES THAT SHALL REMAIN IN OPERATION. CONTRACTOR SHALL INCLUDE ALL REQUIRED BREAKERS, CABLES/CONDUITS AND/OR ANY OTHER EQUIPMENT AS REQUIRED TO KEEP THE EXISTING SYSTEM FUNCTIONAL.
10. ALL MOTORS USED WITH VARIABLE FREQUENCY DRIVES SHALL BE INVERTER DUTY RATED TYPE.
11. ALL OUTDOOR ENCLOSURES CABLES ENTRY POINTS SHALL BE IN THE BOTTOM OF THE ENCLOSURE. IN CASE OF INABILITY TO MAKE BOTTOM PENETRATION, SIDE CONNECTION WOULD BE ACCEPTABLE. ENCLOSURES TOP ENTRY ARE NOT ALLOWED.

POWER DISTRIBUTION AND CONDUITS INSTALLATION REQUIREMENTS:

1. ALL CONDUITS ENDS SHALL BE FREE OF METAL SHAVINGS AND BE PROVIDED WITH FITTINGS WITH INSULATED BUSHING.
2. ALL EXPOSED CONDUITS SHALL BE MINIMUM OF 3/4". ALL BURIED CONDUIT SHALL BE MINIMUM OF 1".
3. ALL UNDERGROUND CONDUITS SHALL HAVE RIGID STEEL ELBOWS.
4. ALL METAL CONDUITS SHALL BE PROTECTED WITH A BITUMINOUS COATING WHEN INSTALLED UNDERGROUND OR WHEN IN CONTACT WITH CONCRETE.
5. CONTRACTOR IS RESPONSIBLE FOR COORDINATING ALL CABLES AND EQUIPMENT LUG SIZES. IN CASE THE CABLE IS OF A LARGER SIZE THAN THE EQUIPMENT LUG, CONTRACTOR SHALL PROVIDE THE REQUIRED CONNECTOR AT NO ADDITIONAL CHARGE TO OWNER.
6. CONTRACTOR SHALL PROVIDE PULL STRING AND PERMANENTLY ATTACHED IDENTIFICATION LABELS AT EACH CONDUIT END FOR ALL SPARE CONDUITS. EACH TAG SHALL INCLUDE CONDUIT NUMBER, SIZE AND DESTINATION POINT.
7. CONTRACTOR SHALL PROVIDE ALL REQUIRED PULL BOXES AND/OR CONDULETS TO MEET NEC ARTICLE 314 FOR CABLE PULLS.
8. ALL CABLES INSTALLED IN CABLE TRAYS SHALL BE TC RATED.
9. CONDUIT FITTING CONNECTION TYPES SHALL BE AS FOLLOWS:
   - 9.1. FOR RMC AND IMC CONDUITS – THREADED TYPE;
   - 9.2. FOR EMT CONDUITS – COMPRESSION TYPE.
10. RIGID CONDUIT CONNECTIONS TO ENCLOSURES SHALL BE MADE WITH MYERS HUBS.
11. ALL OPEN CONDUIT ENDS SHALL BE PROTECTED FROM ELEMENTS PENETRATION TO THE INSIDE THE CONDUIT WITH DUCT SEAL.
12. EQUIPMENT ENCLOSURES THAT ARE NOT SUITABLE FOR RIGID OR FLEXIBLE CONDUIT CONNECTION, THE CONTRACTOR SHALL PROVIDE A CORD GRIP AT THE CONDUIT END TO PROTECT FROM ELEMENTS PENETRATION TO THE INSIDE THE CONDUIT.
13. THE CONTRACTOR SHALL INSTALL EXPANSION COUPLINGS AS REQUIRED TO PREVENT CONDUIT DAMAGE DUE TO LONGITUDAL MOVEMENT AND/OR THERMAL EXPANSION.
14. THE CONTRACTOR SHALL INSTALL DEFLECTION COUPLINGS FOR CONDUITS RUNS THAT ARE SUBJECT TO ANGULAR AND PARALLEL MISALIGNMENT.
15. THE CONTRACTOR SHALL INSTALL DRAIN FITTING IN VERTICAL CONDUIT RUNS AT LOW POINTS IN CONDUIT SYSTEM TO PREVENT ACCUMULATION OF CONDENSATE ABOVE SEAL–OFF FITTINGS.
16. THE CONTRACTOR SHALL INSTALL DRAIN FITTINGS AT LOW POINTS OF CONDUIT RUN TO DRAIN ACCUMULATED CONDENSATE AND TO PROVIDE VENTILATION TO MINIMIZE CONDENSATION.
17. FOR OVERHEAD SERVICES THE CONTRACTOR SHALL INSTALL WEATHERED FITTINGS AS REQUIRED, FOR SERVICE CABLE INSTALLATION THROUGH THE ROOF, USE SERVICE ENTRANCE MAST KITS.
18. THE CONTRACTOR SHALL INSTALL GROUNDING BUSHING AS REQUIRED BY NEC, AS WELL AS FOR THE FOLLOWING CONDITIONS:
    - 18.1. FOR METALLIC RACEWAYS CONTAINING SERVICE CONDUCTORS.
    - 18.2. FOR METALLIC RACEWAYS TERMINATED AT NON–METALLIC ENCLOSURES.
    - 18.3. FOR METALLIC RACEWAYS TERMINATED ON RING KNOKOUTS REMAINING AND THE CIRCUIT EXCEEDING 250V TO GROUND NOMINAL.
    - 18.4. FOR METALLIC RACEWAYS NOT TERMINATED AT ENCLOSURE.

INSTRUMENTATION AND CONTROLS:

1. ALL FIELD MOUNTED INDICATING TRANSMITTERS SHALL BE PROVIDED WITH SUN/RAIN HOOD.
2. ALL CONTROL CABINETS INSTALLED OUTDOORS HOUSING VFD's, SOFT STARTERS, OR PLC's SHALL BE EQUIPPED WITH SUN PROTECTION COVERS TO PREVENT DIRECT SUNLIGHT EXPOSURE.
3. ALL OUTDOOR CONTROL CABINETS WITH HMI SCREENS OR OTHER TYPES OF DISPLAYS SHALL BE EQUIPPED WITH PROTECTIVE COVERS TO SHIELD THE DISPLAYS FROM SUNLIGHT EXPOSURE AND PREVENT DETERIORATION.
4. ALL INSTRUMENT SHALL BE PROVIDED WITH STAINLESS STEEL TAGS ATTACHED USING STAINLESS STEEL TAGGING WIRE.

GROUNDING:

1. MAXIMUM DISTANCE BETWEEN DRIVEN GROUND RODS IS NOT TO EXCEED 50' UNLESS OTHERWISE NOTED.
2. ALL GROUNDING CONDUCTORS TO BE BARE, STRANDED, SOFT DRAWN, COPPER, SIZED AS INDICATED ON THE DESIGN DRAWINGS.
3. MAIN RING GROUND WIRE TO BE MAXIMUM 3' OUTSIDE FOUNDATIONS AND 2'–6" BELOW FINISH GRADE.
4. CONTRACTOR TO DETERMINE ACTUAL LOCATION OF ANY EQUIPMENT UTILIZING BONDS TO GROUNDING TAILS. CONTRACTOR TO LOCATE 1" PVC GROUNDING STUB–UPS IN ACCORDANCE WITH EQUIPMENT VENDOR INFORMATION OR DRAWING REQUIREMENTS.
5. FOR COMPRESSION APPLICATIONS, APPLY A COAT OF "NO–OXIDE" COMPOUND ONTO COPPER CABLE AND COMPRESSION CONNECTORS PRIOR TO CRIMPING CONNECTION OR USE PRE–FILLED CONNECTORS.
6. ALL GROUND CABLES STUBBING UP THROUGH CONCRETE SHALL STUB UP THRU PVC CONDUIT, SIZED PER PLAN DRAWINGS. PVC CONDUIT SHALL EXTEND A MINIMUM OF 6" ABOVE AND 6" BELOW THE CONCRETE.
7. PIGTAILS SHOULD BE INSTALLED THRU 1" PVC CONDUIT, 10' LONG U.N.O.
8. EXOTHERMIC WELDS OR COMPRESSION C–TAP CONNECTORS SHALL BE UTILIZED IN UNDERGROUND INSTALLATIONS. ALL SUCH WELDS CONNECTIONS SHALL BE INSPECTED BY THE SITE ENGINEER REPRESENTATIVE PRIOR TO COVER.
9. ALL ABOVE GROUND GROUNDING CONNECTIONS SHALL EMPLOY PROPERLY RATED COMPRESSION CONNECTORS.
10. THE MAIN GROUNDING RING CONDUCTOR SHALL BE RUN AS MECHANICALLY CONTINUOUS AS POSSIBLE WITH A MINIMUM OF CUTS AND SPLICES.

EDEC, INC.
4120 CHATTAHOOCHEE TRACE
SUITE A
DULUTH, GEORGIA 30097
TEL. (770) 493-8685

GMC
2660 Eastchase Lane
Suite 200
Montgomery, AL 36117
T 334.271.3200

ISSUE	DATE
ISSUED FOR BID	03-15-25

DESIGNER: DV
DRAWN BY: DV

COUNTY RD 29 WATER TREATMENT PLANT
PRATTVILLE WATER WORKS
PRATTVILLE, AL
CMGM230095

ALABAMA LICENSED No. 30182 PROFESSIONAL ENGINEER ALEC ZAYCHIK

ELECTRICAL MATERIALS SCHEDULE

E-002

This drawing is and shall remain the property of Goodwyn, Mills and Cawood, Inc. (GMC) and Goodwyn Mills Cawood LLC (GMC). Unauthorized use of any kind including use on other projects is prohibited. In the event that a conflict arises between the sealed drawings and the electronic files, the sealed drawings will govern.

LIGHTING/POLE SCHEDULE

SYMBOL/TYPE	DESCRIPTION	INSTALLATION ENVIRONMENT	HAZARDOUS AREA	LAMP/VOLTAGE	MOUNTING
B1	EMERGENCY LIGHT/EXIT COMBO FIXTURE COLOR: WHITE ACCESSORIES: INTERNAL BATTERY BASIS OR DESIGN: COLOR: LITHONIA MODEL #: LHQM-LED-R-R0	INDOOR & OUTDOOR; CORROSIVE & NON-CORROSIVE; DRY AND DAMP	N/A	LED 120/277V, 1PH 6WATTS	CEILING/ WALL/ SURFACE
C1	EMERGENCY LIGHT FIXTURE COLOR: WHITE ACCESSORIES: INTERNAL BATTERY BASIS OR DESIGN: BRAND: LITHONIA MODEL #: ELM4L	INDOOR & OUTDOOR; CORROSIVE & NON-CORROSIVE; DRY AND DAMP	N/A	LED 120-277V, 1PH 6WATT	CEILING/ WALL/ SURFACE
D1	INDUSTRIAL STRIP LIGHT, 4FT ENCLOSURE COLOR: WHITE COLOR TEMPERATURE: 4000K ACCESSORIES: NONE BASIS OR DESIGN: BRAND: LITHONIA MODEL #: ZL1N-L48-SMR-5000LM-FST-MVOLT-40K-80CRI-WH	INDOOR; NON-CORROSIVE; DRY	N/A	LED 120/277V, 1PH 34WATTS	CEILING/ SURFACE
D2	INDUSTRIAL STRIP LIGHT, 4FT ENCLOSURE COLOR: WHITE COLOR TEMPERATURE: 4000K ACCESSORIES: NONE BASIS OR DESIGN: BRAND: LITHONIA MODEL #: FEM-L48-4000LM-IMACD-WD-MVOLT-40K-80CRI-WLFEND2	INDOOR AND OUTDOOR; CORROSIVE & NON-CORROSIVE; DRY, DAMP AND WET	N/A	LED 120/277V, 1PH 34WATTS	CEILING/ SURFACE
F1	INDUSTRIAL WALLPACK FIXTURE (ADJUSTABLE LIGHT OUTPUT) ENCLOSURE COLOR: DARK BRONZE COLOR TEMPERATURE: 4000K ACCESSORIES: NONE BASIS OR DESIGN: BRAND: LITHONIA MODEL #: TWPLED-ALO-40K-T3M-MVOLT-DDBXD	INDOOR AND OUTDOOR; CORROSIVE & NON-CORROSIVE; DRY, DAMP AND WET	N/A	LED 120/277V, 1PH 11-48WATTS	WALL/ SURFACE
H11	20FT, 4" DIA. SQUARE STRAIGHT ALUMINUM POLE WITH A TWO (@90 DEG.) AREA LIGHT FIXTURES POLE COLOR: DARK BRONZE FIXTURE COLOR: DARK BRONZE COLOR TEMPERATURE: 4000K FIXTURE ACCESSORIES: NONE BASIS OR DESIGN: BRAND: LITHONIA FIXTURE MODEL #: DSX1LED-P4-40K-70CRI-T2M-MVOLT-SPA5-DDBXD POLE MODEL #: SSA-20-5G-DM29AS-DDBXD	OUTDOOR; CORROSIVE & NON-CORROSIVE; WET	N/A	LED 120-277V, 1PH 125WATTS (EACH)	POLE
H2	20FT, 4" DIA. SQUARE STRAIGHT ALUMINUM POLE WITH A SINGLE AREA LIGHT FIXTURE POLE COLOR: DARK BRONZE FIXTURE COLOR: DARK BRONZE COLOR TEMPERATURE: 4000K FIXTURE ACCESSORIES: NONE BASIS OR DESIGN: BRAND: LITHONIA FIXTURE MODEL #: DSX1LED-P4-40K-70CRI-T2M-MVOLT-SPA5-DDBXD POLE MODEL #: SSA-20-5G-DM19AS-DDBXD	OUTDOOR; CORROSIVE & NON-CORROSIVE; WET	N/A	LED 120-277V, 1PH 125WATTS	POLE
H2P	20FT, 4" DIA. SQUARE STRAIGHT ALUMINUM POLE WITH A SINGLE AREA LIGHT FIXTURE POLE COLOR: DARK BRONZE FIXTURE COLOR: DARK BRONZE COLOR TEMPERATURE: 4000K FIXTURE ACCESSORIES: PHOTOCELL BASIS OR DESIGN: BRAND: LITHONIA FIXTURE MODEL #: DSX1LED-P4-40K-70CRI-T2M-MVOLT-SPA5-DDBXD PHOTOCELL MODEL #: DLL127F1.5JU POLE MODEL #: SSA-20-5G-DM19AS-DDBXD	OUTDOOR; CORROSIVE & NON-CORROSIVE; WET	N/A	LED 120-277V, 1PH 125WATTS	POLE
J1	INDUSTRIAL ROUND HIGH BAY LIGHT FIXTURE FIXTURE COLOR: WHITE COLOR TEMPERATURE: 4000K FIXTURE ACCESSORIES: NONE BASIS OR DESIGN: BRAND: LITHONIA MODEL #:JHBL-12000LM-GL-WD-MVOLT-GZ10-40K-80CRI-DWHXD	INDOOR AND OUTDOOR; CORROSIVE & NON-CORROSIVE; DRY, DAMP AND WET	N/A	LED 120/277V, 1PH 100WATTS	CEILING/ SURFACE/ PENDANT

NOTE:
DESIGN IS BASED ON THE EQUIPMENT SHOWN IN THE ABOVE SCHEDULE. LIGHTS AND POLE SHALL BE PROVIDED AND INSTALLED BY CONTRACTOR PER SCHEDULE. ANY SUBSTITUTIONS SHALL BE APPROVED BY ENGINEER PRIOR TO PURCHASE/INSTALLATION.

EDEC, INC.
4120 CHATTAHOOCHEE TRACE
SUITE A
DULUTH, GEORGIA 30097
TEL. (770) 493-8685

GMC

2660 Eastchase Lane
Suite 200
Montgomery, AL 36117
T 334.271.3200

1" 5" 0" 1"

ISSUE	DATE
ISSUED FOR BID	03-15-25

DESIGNER: DV
DRAWN BY: DV

COUNTY RD 29 WATER TREATMENT PLANT
PRATTVILLE WATER WORKS
PRATTVILLE, AL

CMGM230095

ALABAMA LICENSED No. 30182 PROFESSIONAL ENGINEER ALEC ZAYCHIK

LIGHTING FIXTURES SCHEDULE

E-003

This drawing is and shall remain the property of Goodwyn, Mills and Cawood, Inc. (GMC) and Goodwyn Mills Cawood LLC (GMC). Unauthorized use of any kind including use on other projects is prohibited. In the event that a conflict arises between the sealed drawings and the electronic files, the sealed drawings will govern.

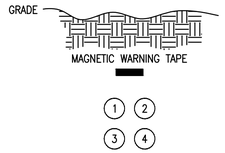

DB–A1

1) 4" C. (480/277V POWER FROM UTILITY TRANSFORMER)
2) 4" C. (480/277V POWER FROM UTILITY TRANSFORMER)
3) 4" C. (480/277V POWER FROM UTILITY TRANSFORMER)
4) 4" C. (SPARE)

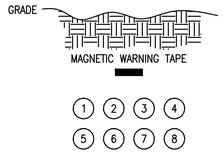

DB–A2

1) 4" C. (480/277V POWER FROM GENERATOR)
2) 4" C. (480/277V POWER FROM GENERATOR)
3) 4" C. (480/277V POWER FROM GENERATOR)
4) 4" C. (SPARE)
5) 1.25" C. (240/120V POWER TO GENERATOR)
6) 1" C. (CONTROLS TO GENERATOR)
7) 1.25" C. (CONTROL TO SCADA)
8) 1" C. (SPARE)

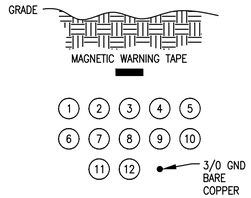

DB–A3

1) 2.5" C. (480V POWER TO CR 29 WELL PUMP)
2) 1" C. (CONTROL FROM CR 29 WELL PUMP)
3) 1" C. (CONTROL FROM CR 29 WELL PUMP)
4) 1" C. (120V POWER TO FLOW TRANSMITTER)
5) 1" GRS C. (SIGNAL FROM FLOW TRANSMITTER)
6) 1" C. (120V POWER TO RECEPTACLE)
7) 1" C. (SPARE)
8) 1" C. (SPARE)
9) 1" C. (208V POWER TO LIGHT POLE)
10) 1" C. (208V POWER TO LIGHT POLE)
11) 1" C. (SPARE)
12) 2" C. (SPARE – RESERVED FOR INTERNET SERVICE) (NOTE 1)

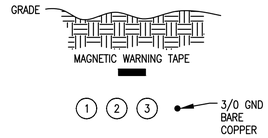

DB–A4

1) 1" C. (208V POWER TO LIGHT POLE)
2) 1" C. (SPARE)
3) 2" C. (SPARE – RESERVED FOR INTERNET SERVICE) (NOTE 1)

DB–A5

1) 2" C. (SPARE – RESERVED FOR INTERNET SERVICE) (NOTE 1)

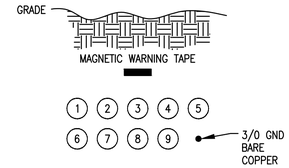

DB–A6

1) 2.5" C. (480V POWER TO CR 29 WELL PUMP)
2) 1" C. (CONTROL FROM CR 29 WELL PUMP)
3) 1" C. (CONTROL FROM CR 29 WELL PUMP)
4) 1" C. (120V POWER TO FLOW TRANSMITTER)
5) 1" GRS C. (SIGNAL FROM FLOW TRANSMITTER)
6) 1" C. (120V POWER TO RECEPTACLE)
7) 1" C. (SPARE)
8) 1" C. (SPARE)
9) 1" C. (208V POWER TO LIGHT POLE)

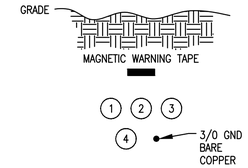

DB–A7

1) 1" C. (120V POWER TO FLOW TRANSMITTER)
2) 1" GRS C. (SIGNAL FROM FLOW TRANSMITTER)
3) 1.25" C. (208V POWER TO SUMP PUMPS)
4) 1.25" C. (SPARE)

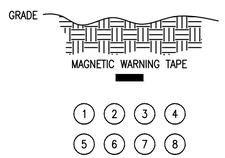

DB–A8

1) 1" C. (120V POWER TO HEAT TRACE JB)
2) 1.25" C. (COMMUNICATION LINK)
3) 1" C. (CONTROLS)
4) 1" GRS C. (SIGNALS)
5) 1" C. (480V POWER TO FCP8000)
6) 1" C. (480V POWER TO FCP8000)
7) 1" C. (SPARE)
8) 1" C. (SPARE)

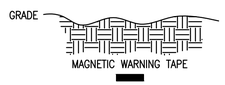

DB–B1

1) 2" C. (480/277V POWER FROM UTILITY TRANSFORMER)
2) 2" C. (SPARE)

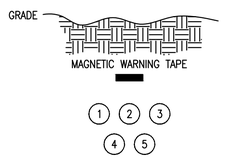

DB–B2

1) 2" C. (480/277V POWER FROM GENERATOR)
2) 1.25" C. (240/120V POWER FROM GENERATOR)
3) 1" C. (CONTROLS TO GENERATOR)
4) 1.25" C. (CONTROL TO SCADA)
5) 1" C. (SPARE)

NOTE:

1. THE CONTRACTOR SHALL COORDINATE THE EXACT CONDUIT STUB–UP LOCATION WITH THE SELECTED INTERNET PROVIDER BY THE CITY FOR FUTURE INTERNET SERVICE INSTALLATION. THE CONTRACTOR SHALL ADJUST THE CONDUIT ROUTING AS NEEDED AS PER THE PROVIDER DIRECTIONS.

EDEC, INC.
4120 CHATTAHOOCHEE TRACE
SUITE A
DULUTH, GEORGIA 30097
TEL. (770) 493-8685

GMC

2660 Eastchase Lane
Suite 200
Montgomery, AL 36117
T 334.271.3200

ISSUE	DATE
ISSUED FOR BID	03-15-25

DESIGNER: DV
DRAWN BY: DV

COUNTY RD 29 WATER TREATMENT PLANT
PRATTVILLE WATER WORKS
PRATTVILLE, AL

CMGM230095

ALABAMA LICENSED No. 30192 PROFESSIONAL ENGINEER ALEC ZAYCHIK

DUCTBANK SECTIONS

E-004

This drawing is and shall remain the property of Goodwyn, Mills and Cawood, Inc. (GMC) and Goodwyn Mills Cawood LLC (GMC). Unauthorized use of any kind including use on other projects is prohibited. In the event that a conflict arises between the sealed drawings and the electronic files, the sealed drawings will govern.

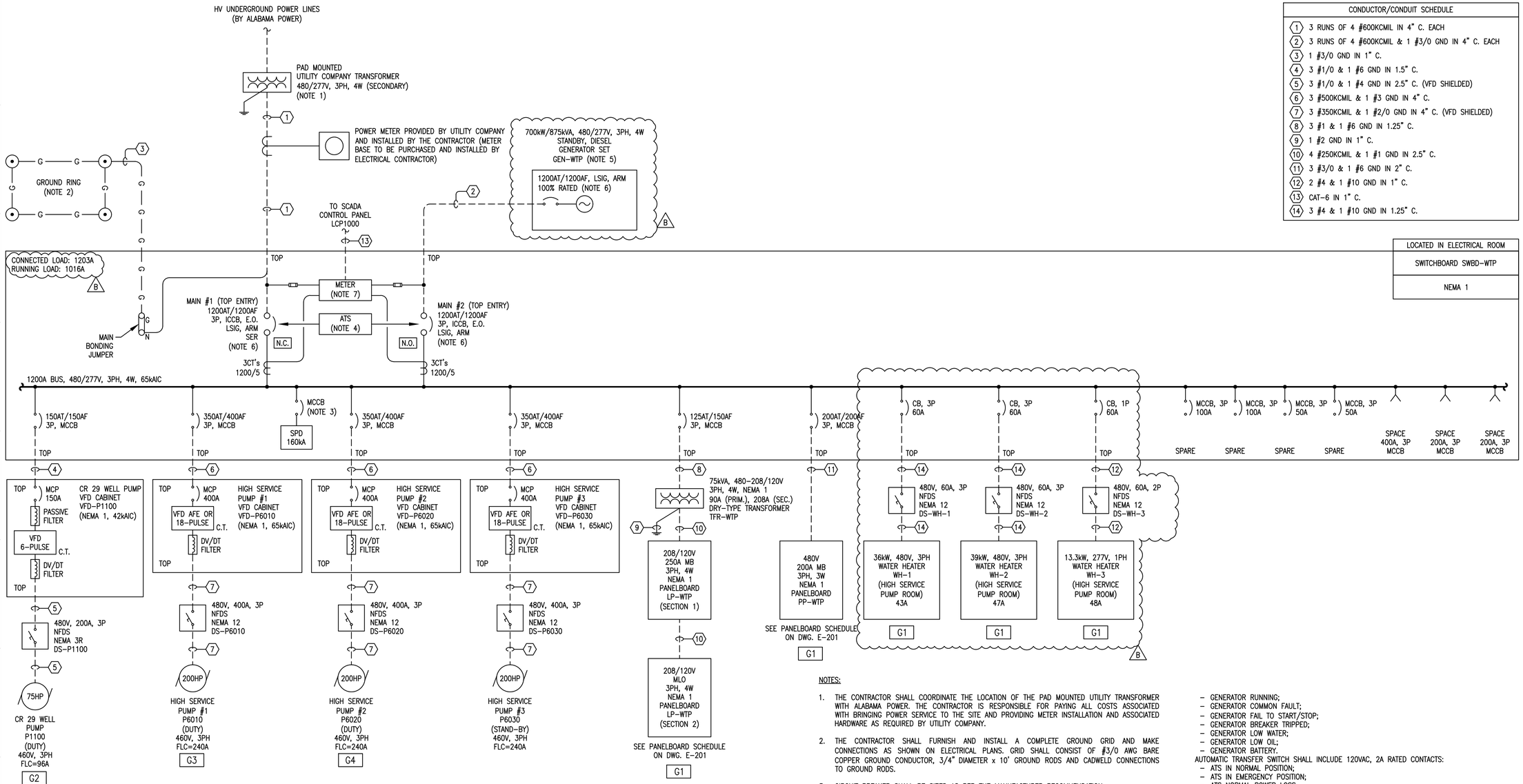

1 WATER TREATMENT PLANT – ONE LINE DIAGRAM

CONDUCTOR/CONDUIT SCHEDULE
(1) 3 RUNS OF 4 #600KCMIL IN 4" C. EACH
(2) 3 RUNS OF 4 #600KCMIL & 1 #3/0 GND IN 4" C. EACH
(3) 1 #3/0 GND IN 1" C.
(4) 3 #1/0 & 1 #6 GND IN 1.5" C.
(5) 3 #1/0 & 1 #4 GND IN 2.5" C. (VFD SHIELDED)
(6) 3 #500KCMIL & 1 #3 GND IN 4" C.
(7) 3 #350KCMIL & 1 #2/0 GND IN 4" C. (VFD SHIELDED)
(8) 3 #1 & 1 #6 GND IN 1.25" C.
(9) 1 #2 GND IN 1" C.
(10) 4 #250KCMIL & 1 #1 GND IN 2.5" C.
(11) 3 #3/0 & 1 #6 GND IN 2" C.
(12) 2 #4 & 1 #10 GND IN 1" C.
(13) CAT-6 IN 1" C.
(14) 3 #4 & 1 #10 GND IN 1.25" C.

LOCATED IN ELECTRICAL ROOM
SWITCHBOARD SWBD-WTP
NEMA 1

NOTES:

1. THE CONTRACTOR SHALL COORDINATE THE LOCATION OF THE PAD MOUNTED UTILITY TRANSFORMER WITH ALABAMA POWER. THE CONTRACTOR IS RESPONSIBLE FOR PAYING ALL COSTS ASSOCIATED WITH BRINGING POWER SERVICE TO THE SITE AND PROVIDING METER INSTALLATION AND ASSOCIATED HARDWARE AS REQUIRED BY UTILITY COMPANY.

2. THE CONTRACTOR SHALL FURNISH AND INSTALL A COMPLETE GROUND GRID AND MAKE CONNECTIONS AS SHOWN ON ELECTRICAL PLANS. GRID SHALL CONSIST OF #3/0 AWG BARE COPPER GROUND CONDUCTOR, 3/4" DIAMETER x 10' GROUND RODS AND CADWELD CONNECTIONS TO GROUND RODS.

3. CIRCUIT BREAKER SHALL BE SIZED AS PER THE MANUFACTURER RECOMMENDATION.

4. TWO MAIN BREAKERS SHALL BE ELECTRICALLY OPERATED AND CAPABLE OF AUTOMATIC TRANSFER. INCLUDE CPT's WITH A TRANSFER SCHEME FOR CONTROL POWER AND VOLTAGE SENSING ON THE LINE SIDE OF EACH BREAKER. INCOMING POWER SHALL BE CONTINUOUSLY MONITORED AT LINE SIDE BOTH BREAKERS. ALL COMPONENTS INCLUDED INTO AUTOMATIC TRANSFER SHALL BE FED FROM THE UPS SUPPLIED AND INSTALLED WITHIN THE SWITCHBOARD. UPS BATTERY SHALL BE SIZED TO BACKUP THE CONTROL CIRCUIT LOADS FOR 30 MINUTES. OPERATOR INTERFACE TOUCH SCREEN SHALL BE PROVIDED ON THE SWITCHBOARD FRONT FOR TIME DELAY ADJUSTMENTS AND OVERALL TRANSFER SCHEME VIEW.

5. THE CONTRACTOR SHALL FURNISH AND INSTALL A COMPLETE 700kW/875kVA, 480/277V, 3PH STANDBY DIESEL GENERATOR SET. THE GENERATOR SET SHALL INCLUDE: GENERATOR; GENERATOR CONTROL PANEL; MAIN CIRCUIT BREAKER; GENERATOR PAD; 24HR RATED FUEL TANK. THE CONTRACTOR SHALL INCLUDE A SET OF ALUMINUM STEPS FOR ACCESS IN CASE OF CENTER OF THE GRIP OF THE OPERATING HANDLE OF THE GENERATOR MAIN CIRCUIT BREAKER, WHEN IN ITS HIGHEST POSITION, IS MORE THAN 6 FT, 7 IN.
THE GENERATOR HOUSING SHALL BE WEATHERPROOF (73 DBA AT 23 FT). SEE GENERATOR SPEC 26 32 13 FOR ADDITIONAL INFORMATION. VOLTAGE DIP AND FREQUENCY DIP SHOULD NOT EXCEED 25% AND 10% ACCORDINGLY. THE GENERATOR SUPPLIER SHALL CONFIRM THE GENERATOR CALCULATIONS PRIOR TO BID, BASED ON SPECIFIED LOADS. IF A LARGER GENERATOR IS REQUIRED TO RUN THE LOADS, THEN CONTRACTOR SHALL INCLUDE A LARGER GENERATOR AND UPSIZE CABLES/CONDUITS AS REQUIRED. A LETTER OF GUARANTEE SHALL BE PROVIDED INCLUDING LOAD CALCULATIONS TO VERIFY THE GENERATOR SELECTION. THE CONTRACTOR SHALL VERIFY GENERATOR BREAKER SIZE AND ADJUST CABLE SIZE PER NEC 310.16 AS REQUIRED.
THE GENERATOR SHALL INCLUDE 120VAC, 2A RATED CONTACTS:
   - GENERATOR RUNNING;
   - GENERATOR COMMON FAULT;
   - GENERATOR FAIL TO START/STOP;
   - GENERATOR BREAKER TRIPPED;
   - GENERATOR LOW WATER;
   - GENERATOR LOW OIL;
   - GENERATOR BATTERY.
AUTOMATIC TRANSFER SWITCH SHALL INCLUDE 120VAC, 2A RATED CONTACTS:
   - ATS IN NORMAL POSITION;
   - ATS IN EMERGENCY POSITION;
   - ATS NORMAL POWER LOSS.

GENERATOR STEPS:
STEP 1:
   - 75kVA MISC. LOADS (208/120V);
   - 125A MISC. LOADS (480V);
   - ONE (1) 36kW, 3PH WATER HEATER #1;
   - ONE (1) 39kW, 3PH WATER HEATER #2;
   - ONE (1) 13.3kW, 1PH WATER HEATER #3.
STEP 2:
   - ONE (1) 75HP CR 29 WELL PUMP (VFD).
STEP 3:
   - ONE (1) 200HP HIGH SERVICE PUMP #1 (VFD).
STEP 4:
   - ONE (1) 200HP HIGH SERVICE PUMP #2 (VFD).

THE CONTRACTOR SHALL COORDINATE THE EQUIPMENT STARTING SEQUENCE AND DELAYS WITH THE SYSTEM INTEGRATOR AND EQUIPMENT SUPPLIERS (SUPPLYING PLC CONTROL PANELS) TO ENSURE PROPER LOAD STAGGERING DURING POWER OUTAGE AND GENERATOR OPERATION.

6. ALL CIRCUIT BREAKERS 1,200AMP AND LARGER SHALL HAVE ARC REDUCTION MAINTENANCE (A.R.M.) SWITCH TO REDUCE ARC FLASH PER NEC. 240.87 AND NFPA 70E.

7. THE SWITCHBOARD SHALL BE PROVIDED WITH POWER METER CAPABLE OF MEASURING VOLTS, AMPS, KW AND POWER FACTOR. ALL METER PARAMETERS SHALL BE AVAILABLE FOR TRANSFERRING TO THE PLANT SCADA SYSTEM THROUGH INTEGRAL ETHERNET PORT. COORDINATE PORT REQUIREMENT WITH SCADA SYSTEM INTEGRATOR.

LEGEND:
C.T. – VFD – CONSTANT TORQUE VFD
V.T. – VFD – VARIABLE TORQUE VFD
G X – DENOTES EQUIPMENT TO BE BACKED UP BY GENERATOR
GENERATOR STEP NUMBER
GENERATOR LOAD

GMC
2660 Eastchase Lane
Suite 200
Montgomery, AL 36117
T 334.271.3200

ISSUE	DATE
ISSUED FOR BID	03-15-25
ADDENDUM 1	03-28-25

DESIGNER: DV
DRAWN BY: DV

COUNTY RD 29 WATER TREATMENT PLANT
PRATTVILLE WATER WORKS
PRATTVILLE, AL
CMGM230095

ALABAMA LICENSED No. 30182 PROFESSIONAL ENGINEER ALEC ZAYCHIK

WATER TREATMENT PLANT - ONE LINE DIAGRAM

E-101

EDEC, INC.
4120 CHATTAHOOCHEE TRACE
SUITE A
DULUTH, GEORGIA 30097
TEL. (770) 493-8685

This drawing is and shall remain the property of Goodwyn, Mills and Cawood, Inc. (GMC) and Goodwyn Mills Cawood LLC (GMC). Unauthorized use of any kind including use on other projects is prohibited. In the event that a conflict arises between the sealed drawings and the electronic files, the sealed drawings will govern.

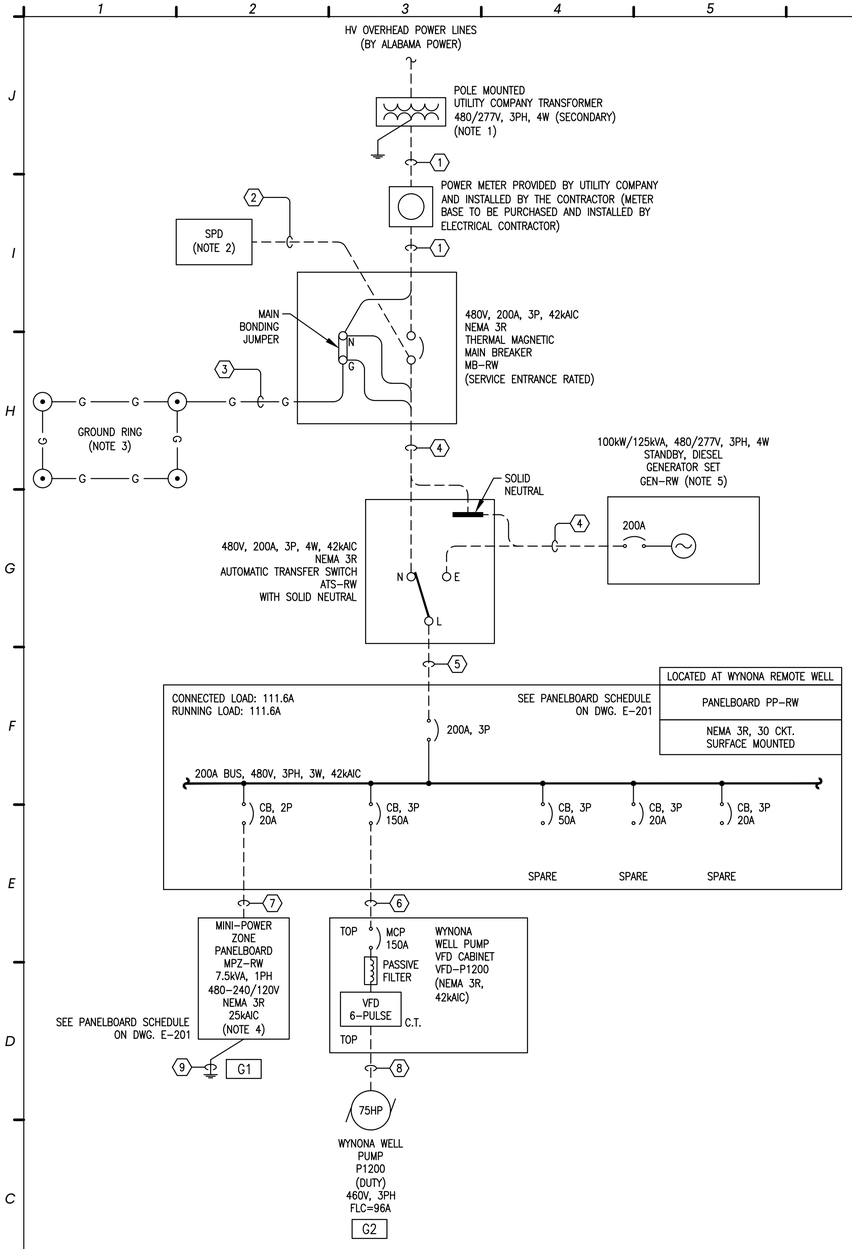

1 WYNONA REMOTE WELL – ONE LINE DIAGRAM

CONDUCTOR/CONDUIT SCHEDULE
(1) 4 #3/0 IN 2" C.
(2) 5 #6 IN 1" C. (3 FT MAX)
(3) 1 #1 GND IN 1" C.
(4) 4 #3/0 & 1 #6 GND IN 2" C.
(5) 3 #3/0 & 1 #6 GND IN 2" C.
(6) 3 #1/0 & 1 #6 GND IN 1.5" C.
(7) 2 #12 & 1 #12 GND IN 1" C.
(8) 3 #1/0 & 1 #4 GND IN 2.5" C. (VFD SHIELDED)
(9) 1 #8 GND IN 1" C.

NOTES:

1. THE CONTRACTOR SHALL COORDINATE THE LOCATION OF THE POLE MOUNTED UTILITY TRANSFORMER WITH ALABAMA POWER. THE CONTRACTOR IS RESPONSIBLE FOR PAYING ALL COSTS ASSOCIATED WITH BRINGING POWER SERVICE TO THE SITE AND PROVIDING METER INSTALLATION AND ASSOCIATED HARDWARE AS REQUIRED BY UTILITY COMPANY.

2. THE CONTRACTOR SHALL PROVIDE AND INSTALL SURGE PROTECTION DEVICE (SPD) IN NEMA 4X STAINLESS STEEL ENCLOSURE. SPD SHALL BE EATON CAT#: SPD-120-480Y-3-0 WITH INTEGRAL DISCONNECT SWITCH OR APPROVED EQUAL.

3. THE CONTRACTOR SHALL FURNISH AND INSTALL A COMPLETE GROUND GRID AND MAKE CONNECTIONS AS SHOWN ON ELECTRICAL PLANS. GRID SHALL CONSIST OF #1 AWG BARE COPPER GROUND CONDUCTOR, 3/4" DIAMETER x 10' GROUND RODS AND CADWELD CONNECTIONS TO GROUND RODS.

4. THE CONTRACTOR SHALL PROVIDE AND INSTALL MINI POWER CENTER IN NEMA 3R ENCLOSURE WHICH SHALL BE A COMBINATION OF 7.5kVA, 480-240/120V, 1PH, 3W TRANSFORMER AND 20 CKT. PANELBOARD. SEE PANELBOARD SCHEDULE ON E-201 SHEET.

5. THE CONTRACTOR SHALL FURNISH AND INSTALL A COMPLETE 100kW/125kVA, 480/277V, 3PH STANDBY DIESEL GENERATOR SET. THE GENERATOR SET SHALL INCLUDE: GENERATOR; GENERATOR CONTROL PANEL; MAIN CIRCUIT BREAKER; GENERATOR PAD; 24HR RATED FUEL TANK AND AUTOMATIC TRANSFER SWITCH IN NEMA 3R ENCLOSURE. THE CONTRACTOR SHALL INCLUDE A SET OF ALUMINUM STEPS FOR ACCESS IN CASE OF CENTER OF THE GRIP OF THE OPERATING HANDLE OF THE GENERATOR MAIN CIRCUIT BREAKER, WHEN IN ITS HIGHEST POSITION, IS MORE THAN 6 FT, 7 IN.
   THE GENERATOR HOUSING SHALL BE WEATHERPROOF (73 DBA AT 23 FT). SEE GENERATOR SPEC 26 32 13 FOR ADDITIONAL INFORMATION. VOLTAGE DIP AND FREQUENCY DIP SHOULD NOT EXCEED 25% AND 10% ACCORDINGLY. THE GENERATOR SUPPLIER SHALL CONFIRM THE GENERATOR CALCULATIONS PRIOR TO BID, BASED ON SPECIFIED LOADS. IF A LARGER GENERATOR IS REQUIRED TO RUN THE LOADS, THEN CONTRACTOR SHALL INCLUDE A LARGER GENERATOR AND UPSIZE CABLES/CONDUITS AS REQUIRED. A LETTER OF GUARANTEE SHALL BE PROVIDED INCLUDING LOAD CALCULATIONS TO VERIFY THE GENERATOR SELECTION. THE CONTRACTOR SHALL VERIFY GENERATOR BREAKER SIZE AND ADJUST CABLE SIZE PER NEC 310.16 AS REQUIRED.
   THE GENERATOR SHALL INCLUDE 120VAC, 2A RATED CONTACTS:
   - GENERATOR RUNNING;
   - GENERATOR COMMON FAULT;
   - GENERATOR FAIL TO START/STOP;
   - GENERATOR BREAKER TRIPPED;
   - GENERATOR LOW WATER;
   - GENERATOR LOW OIL;
   - GENERATOR BATTERY.
   AUTOMATIC TRANSFER SWITCH SHALL INCLUDE 120VAC, 2A RATED CONTACTS:
   - ATS IN NORMAL POSITION;
   - ATS IN EMERGENCY POSITION;
   - ATS NORMAL POWER LOSS.

   GENERATOR STEPS:
   STEP 1:
   - 7.5kVA MISCELLANEOUS LOADS.
   STEP 2:
   - ONE (1) 75HP WYNONA WELL PUMP (VFD).

   THE CONTRACTOR SHALL COORDINATE THE EQUIPMENT STARTING SEQUENCE AND DELAYS WITH THE SYSTEM INTEGRATOR AND EQUIPMENT SUPPLIERS (SUPPLYING PLC CONTROL PANELS) TO ENSURE PROPER LOAD STAGGERING DURING POWER OUTAGE AND GENERATOR OPERATION.

LEGEND:
C.T. – VFD – CONSTANT TORQUE VFD
V.T. – VFD – VARIABLE TORQUE VFD
G X – DENOTES EQUIPMENT TO BE BACKED UP BY GENERATOR
GENERATOR STEP NUMBER
GENERATOR LOAD

EDEC, INC.
4120 CHATTAHOOCHEE TRACE
SUITE A
DULUTH, GEORGIA 30097
TEL. (770) 493-8685

GMC

2660 Eastchase Lane
Suite 200
Montgomery, AL 36117
T 334.271.3200

ISSUE	DATE
ISSUED FOR BID	03-15-25

DESIGNER: DV
DRAWN BY: DV

COUNTY RD 29 WATER TREATMENT PLANT
PRATTVILLE WATER WORKS
PRATTVILLE, AL

CMGM230095

ALABAMA LICENSED No. 30182 PROFESSIONAL ENGINEER ALEC ZAYCHIK

WYNONA REMOTE WELL - ONE LINE DIAGRAM

E-111

This drawing is and shall remain the property of Goodwyn, Mills and Cawood, Inc. (GMC) and Goodwyn Mills Cawood LLC (GMC). Unauthorized use of any kind including use on other projects is prohibited. In the event that a conflict arises between the sealed drawings and the electronic files, the sealed drawings will govern.

PANELBOARD PP-WTP (LOCATED IN ELECTRICAL ROOM)

VOLTAGE (L-N):	N/A	ENCLOSURE TYPE:	NEMA 1
VOLTAGE (L-L):	480V	MOUNTING:	SURFACE
PHASE, WIRES:	3 ϕ, 3 W	AIC RATING (A):	42,000 AIC
MINIMUM BUS CAPACITY (A):	200A	NOTES:	
MAIN O.C. DEVICE (A):	200A, 3P MAIN BREAKER		

CKT NO	DESCRIPTION	TRIP AMPS	POLE	PHASE LOADS (AMP) A		B		C		POLE	TRIP AMPS	DESCRIPTION	CKT NO
1	SODA ASH SILO MAIN CP (FCP8000)	40	3	31.2	25.0					3	40	AIR COMPRESSOR CONTROL PANEL (LCP3500)	2
3						31.2	25.0						4
5								31.2	25.0				6
7	SODA ASH SILO SUBPANEL (FCP-8100)	20	3	16.5	7.6					3	20	CRANE MONORAIL	8
9						16.5	7.6						10
11								16.5	7.6				12
13	UNIT HEATER (UH-1)	20	3	9.0	15.0					3	20	UNIT HEATER (UH-2)	14
15						9.0	15.0						16
17								9.0	15.0				18
19	UNIT HEATER (UH-3)	20	3	15.0	7.6					3	20	EXHAUST FAN (EF-1)	20
21						15.0	7.6						22
23								15.0	7.6				24
25	EXHAUST FAN (EF-2)	20	3	7.6	0.0					3	20	SPARE	26
27						7.6	0.0						28
29								7.6	0.0				30
31	UNIT HEATER (UH-4)	20	3	15.0	0.0					3	20	SPARE	32
33						15.0	0.0						34
35								15.0	0.0				36
37	SPARE	20	3	0.0	0.0					3	20	SPARE	38
39						0.0	0.0						40
41								0.0	0.0				42
				CONNECTED LOAD PHASE TOTALS (AMP)									
				149.5		149.5		149.5					

USE THE FOLLOWING CONDUCTORS FOR PANELBOARD CIRCUITS:
20A – #12AWG; 40A – #8AWG; 100A – #1AWG

1 PP-WTP – PANELBOARD SCHEDULE

PANELBOARD LP-WTP (SECTION 2) (LOCATED IN ELECTRICAL ROOM)

VOLTAGE (L-N):	120V	ENCLOSURE TYPE:	NEMA 1
VOLTAGE (L-L):	208V	MOUNTING:	SURFACE
PHASE, WIRES:	3 ϕ, 4 W	AIC RATING (A):	10,000 AIC
MINIMUM BUS CAPACITY (A):	250A	NOTES:	FED THROUGH "SECTION 1" PANELBOARD
MAIN O.C. DEVICE (A):	MAIN LUGS ONLY		

CKT NO	DESCRIPTION	TRIP AMPS	POLE	PHASE LOADS (AMP) A		B		C		POLE	TRIP AMPS	DESCRIPTION	CKT NO
43	HEAT PUMP (HPU-1)	40	2	28.0	28.0					2	40	HEAT PUMP (HPU-2)	44
45						28.0	28.0						46
47	HEAT PUMP (HPU-3)	40	2					28.0	28.0	2	40	HEAT PUMP (HPU-4)	48
49				28.0	28.0								50
51	CHEM. INJECTION VAULT SUMP PUMP	20	2			5.4	1.2			1	20	OUTDOOR LIGHTING POLE	52
53								5.4	1.2				54
55	SPARE	20	1	0.0	0.0					1	20	SPARE	56
57	SPARE	20	1			0.0	0.0			1	20	SPARE	58
59	SPARE	20	1					0.0	0.0	1	20	SPARE	60
61	SPACE			0.0	0.0					1	20	SPARE	62
63	SPACE					0.0	0.0			1	20	SPARE	64
65	SPACE							0.0	0.0			SPACE	66
67	SPACE			0.0	0.0							SPACE	68
69	SPACE					0.0	0.0					SPACE	70
71	SPACE							0.0	0.0			SPACE	72
73	SPACE			0.0	0.0							SPACE	74
75	SPACE					0.0	0.0					SPACE	76
77	SPACE							0.0	0.0			SPACE	78
79	SPACE			0.0	0.0							SPACE	80
81	SPACE					0.0	0.0					SPACE	82
83	SPACE							0.0	0.0			SPACE	84
				CONNECTED LOAD PHASE TOTALS (AMP)									
				112.0		62.6		62.6					

USE THE FOLLOWING CONDUCTORS FOR PANELBOARD CIRCUITS:
20A – #12AWG; 40A – #8AWG;

(*) – 30mA, EGFP CIRCUIT BREAKER

3 LP-WTP (SECTION 2) – PANELBOARD SCHEDULE

PANELBOARD LP-WTP (SECTION 1) (LOCATED IN ELECTRICAL ROOM)

VOLTAGE (L-N):	120V	ENCLOSURE TYPE:	NEMA 1
VOLTAGE (L-L):	208V	MOUNTING:	SURFACE
PHASE, WIRES:	3 ϕ, 4 W	AIC RATING (A):	10,000 AIC
MINIMUM BUS CAPACITY (A):	250A	NOTES:	INCLUDE FEED THROUGH LUGS
MAIN O.C. DEVICE (A):	250A, 3P MAIN BREAKER		

CKT NO	DESCRIPTION	TRIP AMPS	POLE	PHASE LOADS (AMP) A		B		C		POLE	TRIP AMPS	DESCRIPTION	CKT NO
1	SPARE	20	1	0.0	10.0					2	20	GENERATOR BLOCK HEATER	2
3	DEEP WELL #1 RECEPTACLE	20	1			1.5	10.0						4
5	FLOW INDICATING TRANSMITTER (FIT-P1100)	20	1					1.0	5.0	1	20	GENERATOR BATTERY CHARGER	6
7	FLOW INDICATING TRANSMITTER (FIT-6000)	20	1	1.0	1.0					1	20	FLOW INDICATION TRANSMITTER (FIT-6100)	8
9	ULTRASONIC LEVEL TRANSMITTER (LIT-6000)	20	1			1.0	7.0			1	20	AIR COMPRESSOR DRYER	10
11	HIGH SERVICE PUMP ROOM LIGHTS	20	2					5.0	1.0	1	20	CHLORINE CYLINDERS SCALE INDICATING TRANSMITTER #1 (WIT-8110)	12
13				5.0	1.0					1	20	CHLORINE CYLINDERS SCALE INDICATING TRANSMITTER #2 (WIT-8120)	14
15	CHLORINE GAS AUTOVALVE (FIC-8110)	20	1			1.0	1.0			1	20	CHLORINE GAS DETECTOR WITH ALARM LIGHT & HORN (XA-8100)	16
17	PHOSPHATE TANK SCALE TRANSMITTER (WIT-8310)	20	1					1.0	1.0	1	20	FLUORIDE TANK SCALE TRANSMITTER (WIT-8210)	18
19	PHOSPHATE METERING PUMP (P8310)	20	1	5.0	5.0					1	20	FLUORIDE METERING PUMP (P8210)	20
21	PHOSPHATE PUMP RECEPTACLE	20	1			5.0	5.0			1	20	FLUORIDE PUMP RECEPTACLE	22
23	SODA ASH HEAT TRACE	20(*)	1					3.0	1.0	1	20	FLOW INDICATING TRANSMITTER (FIT-6200)	24
25	MULTI-PARAMETER ANALYZER (AIT-6300)	20	1	3.0	3.0					1	20(*)	SAFETY SHOWER HEAT TRACE (SS-WTP)	26
27	SAFETY SHOWER ALARM PANEL (CP-EW-WTP)	20	1			1.0	0.5			1	20	LIGHTING CONTACTOR (LC-WTP)	28
29	EXTERIOR LIGHTS (OPERATIONS BUILDING)	20	1					4.0	1.0	1	20	CHLORINE ROOM LIGHTS	30
31	CR 29 SEAL WATER HEAT TRACE	20(*)	1	3.0	1.8					1	20	ELECTRICAL ROOM LIGHTS	32
33	ELECTRICAL ROOM RECEPTACLES	20	1			4.5	4.5			1	20	HIGH SERVICE PUMP ROOM RECEPTACLES	34
35	CHLORINE ROOM RECEPTACLES	20	1					3.0	6.0	1	20	HIGH SERVICE PUMP ROOM RECEPTACLES	36
37	OUTDOOR LIGHTING POLE	20	1	0.6	5.4					2	20	METERING VAULT SUMP PUMP	38
39						0.6	5.4						40
41	EXHAUST FAN (EF-3)	20	1					5.0	24.0	1	30	SCADA PANEL LCP-1000	42
				CONNECTED LOAD PHASE TOTALS (AMP)									
				44.8		48.0		61.0					
				TOTAL (SEC. 1 & 2) (AMP)									
				156.8		110.6		123.6					

USE THE FOLLOWING CONDUCTORS FOR PANELBOARD CIRCUITS:
20A – #12AWG; 30A – #10AWG;

(*) – 30mA, EGFP CIRCUIT BREAKER

2 LP-WTP (SECTION 1) – PANELBOARD SCHEDULE

PANELBOARD PP-RW (LOCATED AT WYNONA REMOTE WELL)

VOLTAGE (L-N):	N/A	ENCLOSURE TYPE:	NEMA 3R
VOLTAGE (L-L):	480V	MOUNTING:	SURFACE
PHASE, WIRES:	3 ϕ, 3 W	AIC RATING (A):	42,000 AIC
MINIMUM BUS CAPACITY (A):	200A	NOTES:	
MAIN O.C. DEVICE (A):	200A, 3P MAIN BREAKER		

CKT NO	DESCRIPTION	TRIP AMPS	POLE	PHASE LOADS (AMP) A		B		C		POLE	TRIP AMPS	DESCRIPTION	CKT NO
1	MINI-POWER ZONE PANELBOARD (MPZ-DW)	20	2	10.4	96.0					3	150	WYNONA WELL PUMP VFD CABINET (VFD-1200)	2
3						10.4	96.0						4
5	SPARE	50	3					0.5	96.0				6
7				0.0	0.0					3	20	SPARE	8
9						0.0	0.0						10
11	SPARE	20	3					0.0	0.0				12
13				0.0	0.0							SPARE	14
15						0.0	0.0					SPARE	16
17	SPACE							0.0	0.0			SPARE	18
19	SPACE			0.0	0.0							SPARE	20
21	SPACE					0.0	0.0					SPACE	22
23	SPACE							0.0	0.0			SPACE	24
25	SPACE			0.0	0.0							SPACE	26
27	SPACE					0.0	0.0					SPACE	28
29	SPACE							0.0	0.0			SPACE	30
				CONNECTED LOAD PHASE TOTALS (AMP)									
				106.4		106.4		96.5					

USE THE FOLLOWING CONDUCTORS FOR PANELBOARD CIRCUITS:
20A – #12AWG; 150A – #1/0AWG

4 PP-RW – PANELBOARD SCHEDULE

MINI-POWER ZONE MPZ-RW (LOCATED AT WYNONA REMOTE WELL)

VOLTAGE (L-N):	120V	ENCLOSURE TYPE:	NEMA 3R
VOLTAGE (L-L):	240V	MOUNTING:	SURFACE
PHASE, WIRES:	1 ϕ, 3 W	AIC RATING (A):	25,000 AIC AT 480V
MINIMUM BUS CAPACITY (A):	50A	NOTES:	THE MPZ SHALL BE EQUIPPED WITH 7.5kVA, 480-240/120V, 1PH, 3W TRANSFORMER
MAIN O.C. DEVICE (A):	20A, 2P MB PRIM.; 40A, 2P MB SEC.		

CKT NO	DESCRIPTION	TRIP AMPS	POLE	PHASE LOADS (AMP) A		B		POLE	TRIP AMPS	DESCRIPTION	CKT NO
1	SCADA PANEL RTU-RW	20	1	1.0	1.5			1	20	RECEPTACLE	2
3	GENERATOR BLOCK HEATER	20	2			10.0	5.0	1	20	GENERATOR BATTERY CHARGER	4
5				10.0	1.0			1	20	FLOW INDICATION TRANSMITTER (FIT-1200)	6
7	SITE LIGHTING	20	1			1.0	0.0	1	20	SPARE	8
9	WYNONA WELL SEAL WATER HEAT TRACE	20(*)	1	3.0	0.0			1	20	SPARE	10
11	SPARE	20	1			0.0	0.0	1	20	SPARE	12
13	SPARE	20	1	0.0	0.0					SPACE	14
15	SPACE					0.0	0.0			SPACE	16
17	SPACE			0.0	0.0					SPACE	18
19	SPACE					0.0	0.0			SPACE	20
				CONNECTED LOAD PHASE TOTALS (AMP)							
				16.5		16.0					

USE THE FOLLOWING CONDUCTORS FOR PANELBOARD CIRCUITS:
20A – #12AWG;

(*) – 30mA, EGFP CIRCUIT BREAKER

5 MPZ-RW – PANELBOARD SCHEDULE

EDEC, INC.
4120 CHATTAHOOCHEE TRACE
SUITE A
DULUTH, GEORGIA 30097
TEL. (770) 493-8685

GMC

2660 Eastchase Lane
Suite 200
Montgomery, AL 36117
T 334.271.3200

1" 5" 0" 1"

ISSUE	DATE
ISSUED FOR BID	03-15-25
ADDENDUM 1	03-28-25

DESIGNER: DV
DRAWN BY: DV

COUNTY RD 29 WATER TREATMENT PLANT
PRATTVILLE WATER WORKS
PRATTVILLE, AL

CMGM230095

ALABAMA LICENSED No. 30192 PROFESSIONAL ENGINEER ALEC ZAYCHIK

PANELBOARD SCHEDULES

E-201

This drawing is and shall remain the property of Goodwyn, Mills and Cawood, Inc. (GMC) and Goodwyn Mills Cawood LLC (GMC). Unauthorized use of any kind including use on other projects is prohibited. In the event that a conflict arises between the sealed drawings and the electronic files, the sealed drawings will govern.

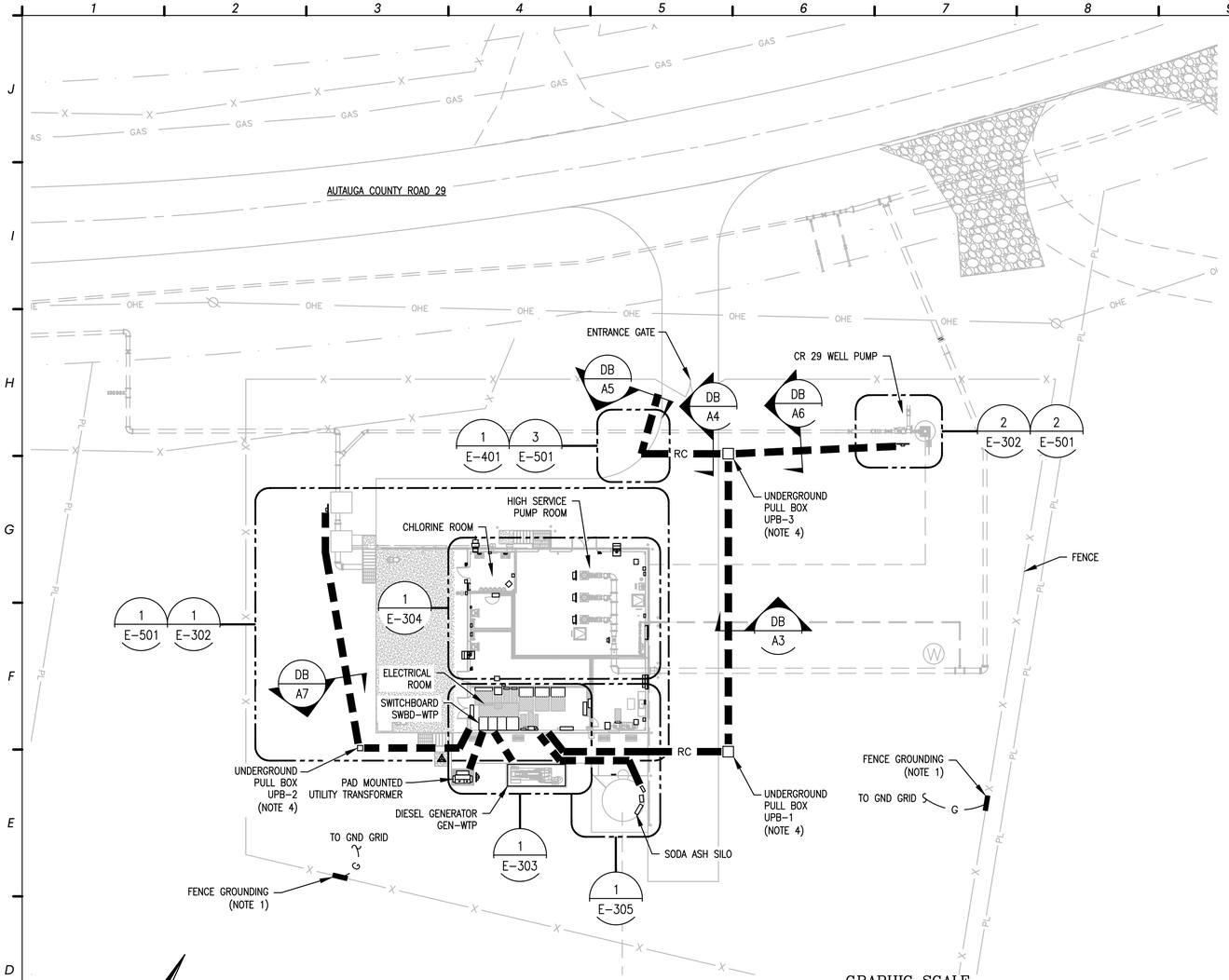

1 WATER TREATMENT PLANT – OVERALL ELECTRICAL SITE PLAN

SCALE: 1" = 20'

GRAPHIC SCALE

20 0 10 20 40 80

(IN FEET)
1 inch = 20 ft.

NOTES:

1. THE CONTRACTOR SHALL GROUND FENCE AT TWO (2) PLACES AS REQUIRED BY NEC ARTICLE 250.194.
2. THE CONTRACTOR SHALL ADJUST ROUTING AND STUB-UP LOCATIONS OF THE UNDERGROUND DUCTBANK CONDUITS BASED ON THE ACTUAL EQUIPMENT LOCATION.
3. ONLY MAJOR UNDERGROUND CONDUITS ARE SHOWN FOR CLARITY. THE CONTRACTOR SHALL COORDINATE ALL UNDERGROUND CONDUIT RUNS WITH OTHER UNDERGROUND UTILITIES. DUCTBANKS UNDER THE ROAD SHALL BE CONCRETE ENCASED. SEE DETAIL "A" AND "B" ON DWG. E-901.
4. THE CONTRACTOR SHALL PROVIDE AND INSTALL UNDERGROUND PULL BOXES SIZED IN ACCORDANCE WITH NEC ARTICLE 314.28 (SEE DETAIL "D" ON DWG. E-902 FOR UNDERGROUND PULLBOX DETAILS).
5. THE CONTRACTOR SHALL COORDINATE ALL WORK WITH OTHER DISCIPLINES. IT IS THE RESPONSIBILITY OF THE CONTRACTOR TO VERIFY THE ACTUAL LOCATION OF EQUIPMENT, PIPING, ETC. AND COORDINATE INSTALLATION ACCORDINGLY, THE EQUIPMENT WIRING SHALL INCLUDE ALL NECESSARY CABLES AND CONDUIT REQUIRED FOR THE PROPER AND SAFE EQUIPMENT OPERATION.

LEGEND:

– DIRECT BURIED UNDERGROUND DUCTBANK

RC RC – REINFORCED CONCRETE ENCASED UNDERGROUND DUCTBANK

EDEC, INC.
4120 CHATTAHOOCHEE TRACE
SUITE A
DULUTH, GEORGIA 30097
TEL. (770) 493-8685

GMC

2660 Eastchase Lane
Suite 200
Montgomery, AL 36117
T 334.271.3200

1" 5" 0" 1"

ISSUE	DATE
ISSUED FOR BID	03-15-25

DESIGNER: DV
DRAWN BY: DV

COUNTY RD 29 WATER TREATMENT PLANT
PRATTVILLE WATER WORKS
PRATTVILLE, AL

CMGM230095

ALABAMA LICENSED No. 30182 PROFESSIONAL ENGINEER ALEC ZAYCHIK

WATER TREATMENT PLANT-OVERALL ELECTRICAL SITE PLAN

E-301

This drawing is and shall remain the property of Goodwyn, Mills and Cawood, Inc. (GMC) and Goodwyn Mills Cawood LLC (GMC). Unauthorized use of any kind including use on other projects is prohibited. In the event that a conflict arises between the sealed drawings and the electronic files, the sealed drawings will govern.

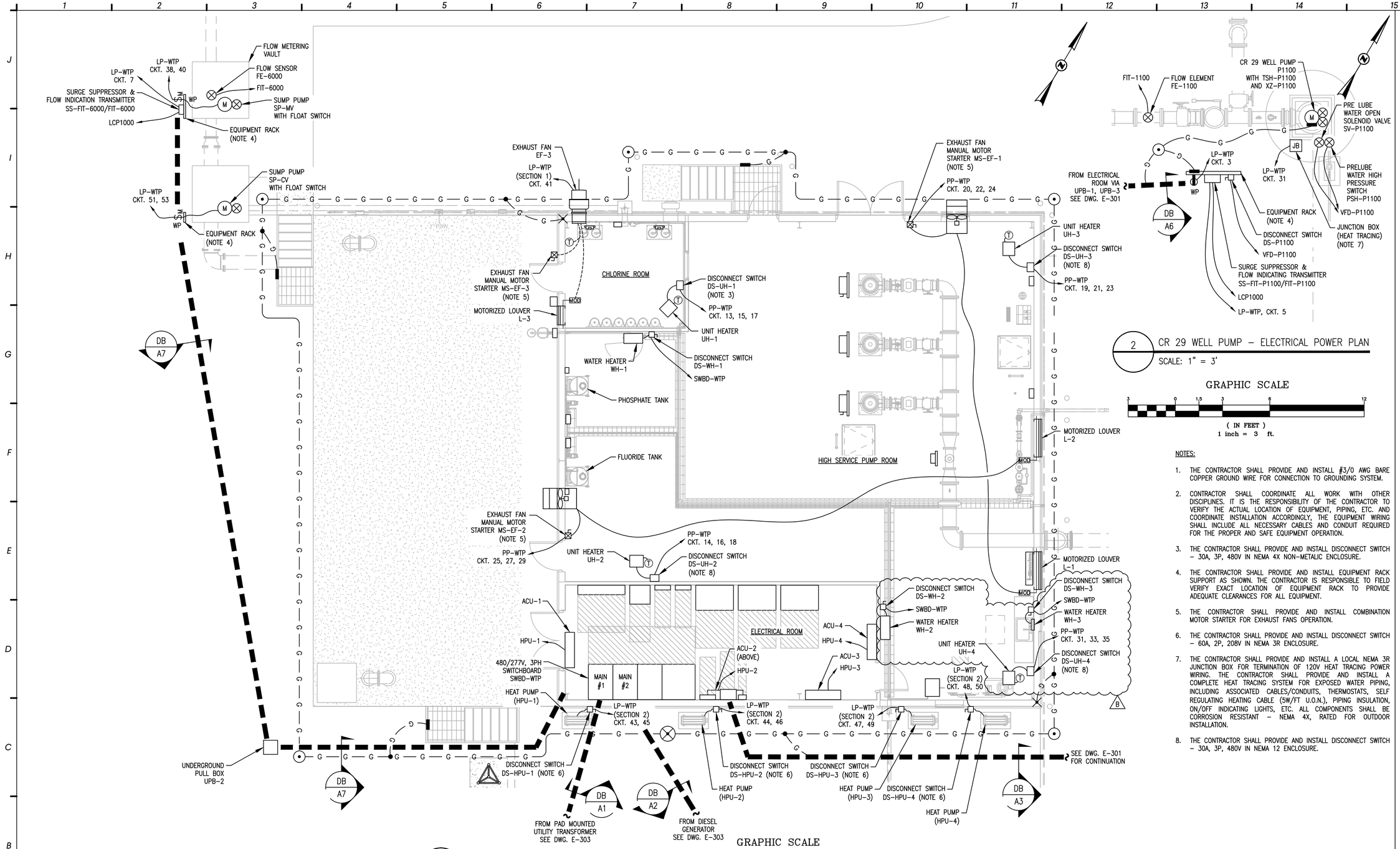

1 OPERATIONS BUILDING – POWER PLAN

SCALE: 1" = 5'

2 CR 29 WELL PUMP – ELECTRICAL POWER PLAN

SCALE: 1" = 3'

NOTES:

1. THE CONTRACTOR SHALL PROVIDE AND INSTALL #3/0 AWG BARE COPPER GROUND WIRE FOR CONNECTION TO GROUNDING SYSTEM.
2. CONTRACTOR SHALL COORDINATE ALL WORK WITH OTHER DISCIPLINES. IT IS THE RESPONSIBILITY OF THE CONTRACTOR TO VERIFY THE ACTUAL LOCATION OF EQUIPMENT, PIPING, ETC. AND COORDINATE INSTALLATION ACCORDINGLY, THE EQUIPMENT WIRING SHALL INCLUDE ALL NECESSARY CABLES AND CONDUIT REQUIRED FOR THE PROPER AND SAFE EQUIPMENT OPERATION.
3. THE CONTRACTOR SHALL PROVIDE AND INSTALL DISCONNECT SWITCH – 30A, 3P, 480V IN NEMA 4X NON-METALIC ENCLOSURE.
4. THE CONTRACTOR SHALL PROVIDE AND INSTALL EQUIPMENT RACK SUPPORT AS SHOWN. THE CONTRACTOR IS RESPONSIBLE TO FIELD VERIFY EXACT LOCATION OF EQUIPMENT RACK TO PROVIDE ADEQUATE CLEARANCES FOR ALL EQUIPMENT.
5. THE CONTRACTOR SHALL PROVIDE AND INSTALL COMBINATION MOTOR STARTER FOR EXHAUST FANS OPERATION.
6. THE CONTRACTOR SHALL PROVIDE AND INSTALL DISCONNECT SWITCH – 60A, 2P, 208V IN NEMA 3R ENCLOSURE.
7. THE CONTRACTOR SHALL PROVIDE AND INSTALL A LOCAL NEMA 3R JUNCTION BOX FOR TERMINATION OF 120V HEAT TRACING POWER WIRING. THE CONTRACTOR SHALL PROVIDE AND INSTALL A COMPLETE HEAT TRACING SYSTEM FOR EXPOSED WATER PIPING, INCLUDING ASSOCIATED CABLES/CONDUITS, THERMOSTATS, SELF REGULATING HEATING CABLE (5W/FT U.O.N.), PIPING INSULATION, ON/OFF INDICATING LIGHTS, ETC. ALL COMPONENTS SHALL BE CORROSION RESISTANT – NEMA 4X, RATED FOR OUTDOOR INSTALLATION.
8. THE CONTRACTOR SHALL PROVIDE AND INSTALL DISCONNECT SWITCH – 30A, 3P, 480V IN NEMA 12 ENCLOSURE.

LEGEND:

– DIRECT BURIED UNDERGROUND DUCTBANK

RC RC – REINFORCED CONCRETE ENCASED UNDERGROUND DUCTBANK

EDEC, INC.
4120 CHATTAHOOCHEE TRACE
SUITE A
DULUTH, GEORGIA 30097
TEL. (770) 493-8685

GMC
2660 Eastchase Lane
Suite 200
Montgomery, AL 36117
T 334.271.3200

ISSUE	DATE
ISSUED FOR BID	03-15-25
ADDENDUM 1	03-28-25

DESIGNER: DV
DRAWN BY: DV

COUNTY RD 29 WATER TREATMENT PLANT
PRATTVILLE WATER WORKS
PRATTVILLE, AL

CMGM230095

ALABAMA LICENSED No. 30182 PROFESSIONAL ENGINEER ALEC ZAYCHIK

OPERATIONS BUILDING ELECTRICAL POWER PLAN

E-302

This drawing is and shall remain the property of Goodwyn, Mills and Cawood, Inc. (GMC) and Goodwyn Mills Cawood LLC (GMC). Unauthorized use of any kind including use on other projects is prohibited. In the event that a conflict arises between the sealed drawings and the electronic files, the sealed drawings will govern.

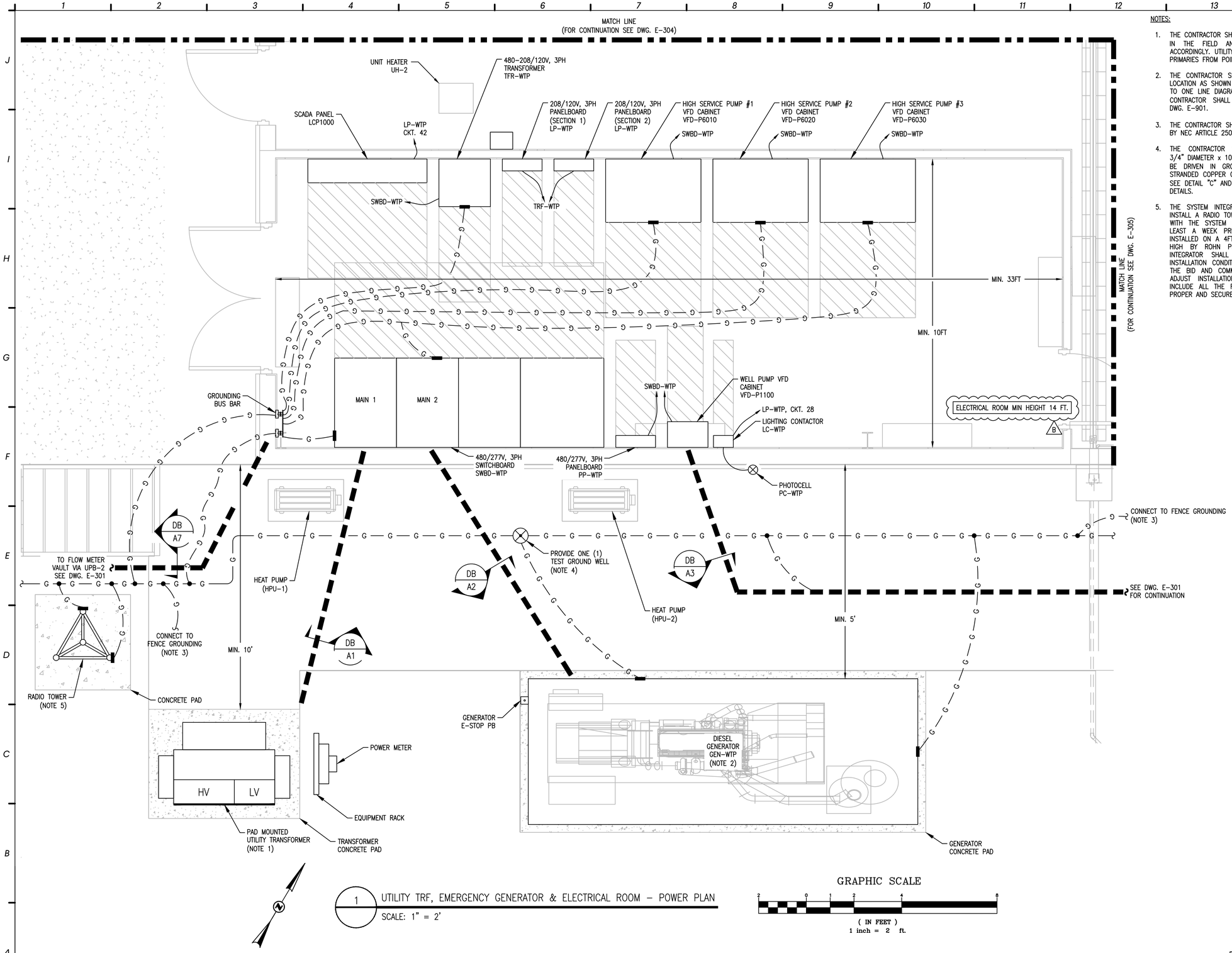

1 UTILITY TRF, EMERGENCY GENERATOR & ELECTRICAL ROOM – POWER PLAN

SCALE: 1" = 2'

GRAPHIC SCALE

(IN FEET)
1 inch = 2 ft.

NOTES:

1. THE CONTRACTOR SHALL COORDINATE ACTUAL UTILITY TRANSFORMER LOCATION IN THE FIELD AND ADJUST SECONDARY CABLES/CONDUITS ROUTING ACCORDINGLY. UTILITY COMPANY SHALL PROVIDE AND INSTALL HIGH VOLTAGE PRIMARIES FROM POINT OF SERVICE TO NEW TRANSFORMER.
2. THE CONTRACTOR SHALL PROVIDE AND INSTALL STAND-BY GENERATOR IN LOCATION AS SHOWN AND WITH THE REQUIRED WORKING CLEARANCES. REFER TO ONE LINE DIAGRAM ON DWG. E-101 FOR FURTHER REQUIREMENTS. THE CONTRACTOR SHALL PROVIDE GENERATOR PAD AS PER DETAIL "E" ON DWG. E-901.
3. THE CONTRACTOR SHALL GROUND FENCE AT TWO (2) PLACES AS REQUIRED BY NEC ARTICLE 250.194.
4. THE CONTRACTOR SHALL PROVIDE A GROUND GRID CONSISTING OF 3/4" DIAMETER x 10' LONG COPPER CLAD GROUND RODS. THE RODS SHALL BE DRIVEN IN GROUND CONNECTED TOGETHER WITH #3/0 AWG BARE STRANDED COPPER CONDUCTORS. PROVIDE A GROUND WELL FOR ONE ROD. SEE DETAIL "C" AND "D" ON DWG. E-901 FOR GROUND WELL INSTALLATION DETAILS.
5. THE SYSTEM INTEGRATOR SHALL PROVIDE AND THE CONTRACTOR SHALL INSTALL A RADIO TOWER. THE CONTRACTOR SHALL COORDINATE INSTALLATION WITH THE SYSTEM INTEGRATOR AND CONTACT A SYSTEM INTEGRATOR AT LEAST A WEEK PRIOR TO INSTALLATION. THE RADIO TOWER SHALL BE INSTALLED ON A 4FT X 4FT CONCRETE BASE, THE TOWER SHALL BE 21FT HIGH BY ROHN PRODUCTS, LLC OR APPROVED EQUAL. THE SYSTEM INTEGRATOR SHALL PERFORM A RADIO SURVEY AND CONFIRM THE INSTALLATION CONDITIONS AND ADJUST THE RADIO TOWER HEIGHT DURING THE BID AND COMMUNICATE THIS INFORMATION TO THE CONTRACTOR TO ADJUST INSTALLATION METHOD AS REQUIRED. THE CONTRACTOR SHALL INCLUDE ALL THE REQUIRED INSTALLATION HARDWARE TO ENSURE TOWER PROPER AND SECURE TOWER INSTALLATION.

LEGEND:

– DIRECT BURIED UNDERGROUND DUCTBANK

RC RC – REINFORCED CONCRETE ENCASED UNDERGROUND DUCTBANK

EDEC, INC.
4120 CHATTAHOOCHEE TRACE
SUITE A
DULUTH, GEORGIA 30097
TEL. (770) 493-8685

GMC

2660 Eastchase Lane
Suite 200
Montgomery, AL 36117
T 334.271.3200

ISSUE	DATE
ISSUED FOR BID	03-15-25
ADDENDUM 1	03-28-25

DESIGNER: DV
DRAWN BY: DV

COUNTY RD 29 WATER TREATMENT PLANT
PRATTVILLE WATER WORKS
PRATTVILLE, AL

CMGM230095

ALABAMA LICENSED No. 30182 PROFESSIONAL ENGINEER ALEC ZAYCHIK

UTILITY TRF & GENERATOR & ELECTRICAL ROOM - POWER PLAN

E-303

This drawing is and shall remain the property of Goodwyn, Mills and Cawood, Inc. (GMC) and Goodwyn Mills Cawood LLC (GMC). Unauthorized use of any kind including use on other projects is prohibited. In the event that a conflict arises between the sealed drawings and the electronic files, the sealed drawings will govern.

NOTES:

1. THE CONTRACTOR SHALL PROVIDE AND INSTALL NEMA 12 JUNCTION BOXES ADEQUATELY SIZED FOR ASSOCIATED CABLES AND CONDUITS.
2. THE CONTRACTOR SHALL PROVIDE AND INSTALL DISCONNECT SWITCH – 30A, 3P, 480V IN 12 ENCLOSURE.

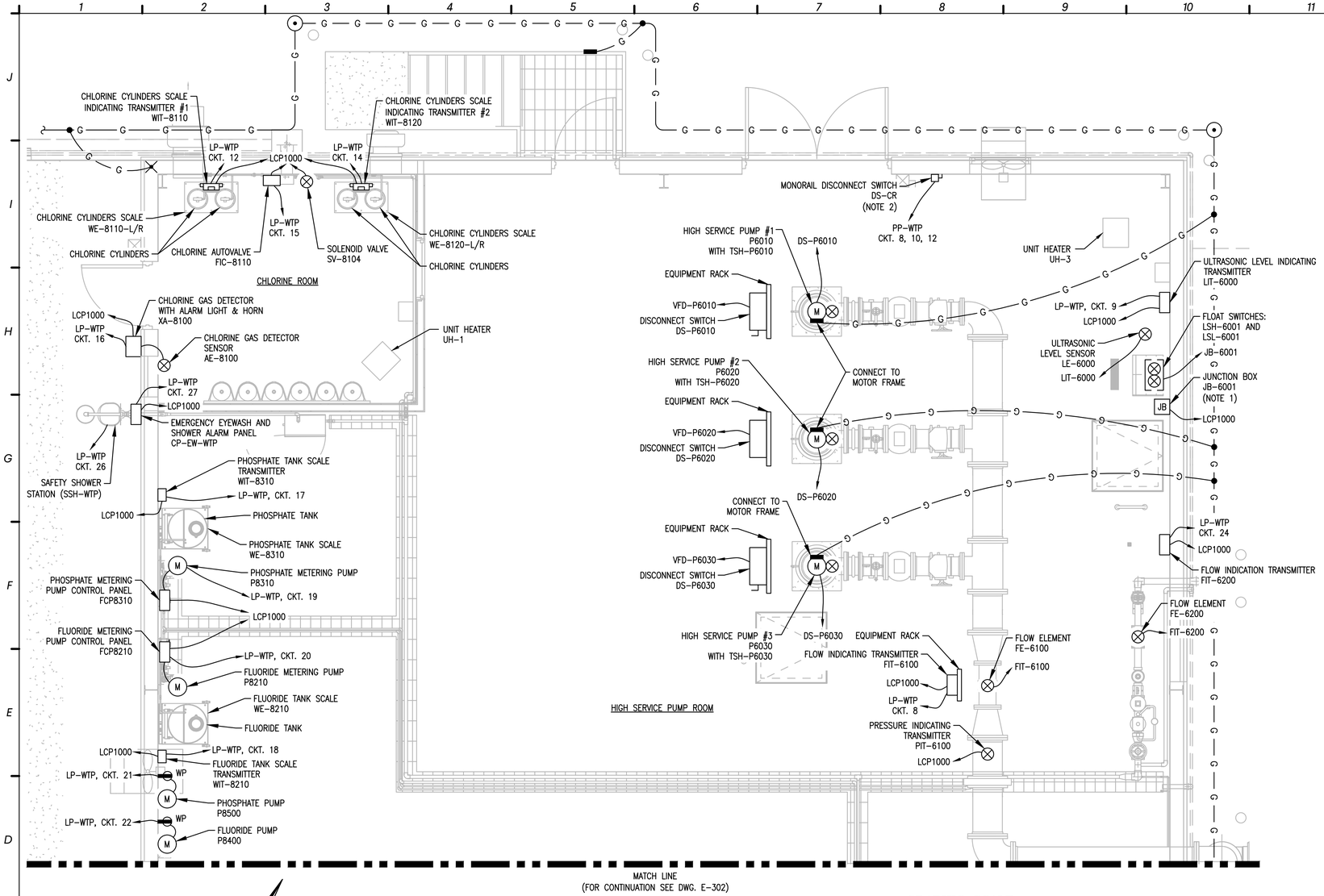

1 HIGH SERVICE PUMP & CHEMICAL ROOM – ELECTRICAL POWER PLAN

SCALE: 1" = 3'

GRAPHIC SCALE

3 0 1.5 3 6 12

(IN FEET)
1 inch = 3 ft.

GMC

2660 Eastchase Lane
Suite 200
Montgomery, AL 36117
T 334.271.3200

1" 5" 0" 1"

ISSUE	DATE
ISSUED FOR BID	03-15-25

DESIGNER: DV
DRAWN BY: DV

COUNTY RD 29 WATER TREATMENT PLANT
PRATTVILLE WATER WORKS
PRATTVILLE, AL

CMGM230095

ALABAMA LICENSED No. 30182 PROFESSIONAL ENGINEER ALEC ZAYCHIK

HIGH SERVICE PUMP & CHEMICAL ROOM - ELECTRICAL POWER PLAN

E-304

EDEC, INC.
4120 CHATTAHOOCHEE TRACE
SUITE A
DULUTH, GEORGIA 30097
TEL. (770) 493-8685

This drawing is and shall remain the property of Goodwyn, Mills and Cawood, Inc. (GMC) and Goodwyn Mills Cawood LLC (GMC). Unauthorized use of any kind including use on other projects is prohibited. In the event that a conflict arises between the sealed drawings and the electronic files, the sealed drawings will govern.

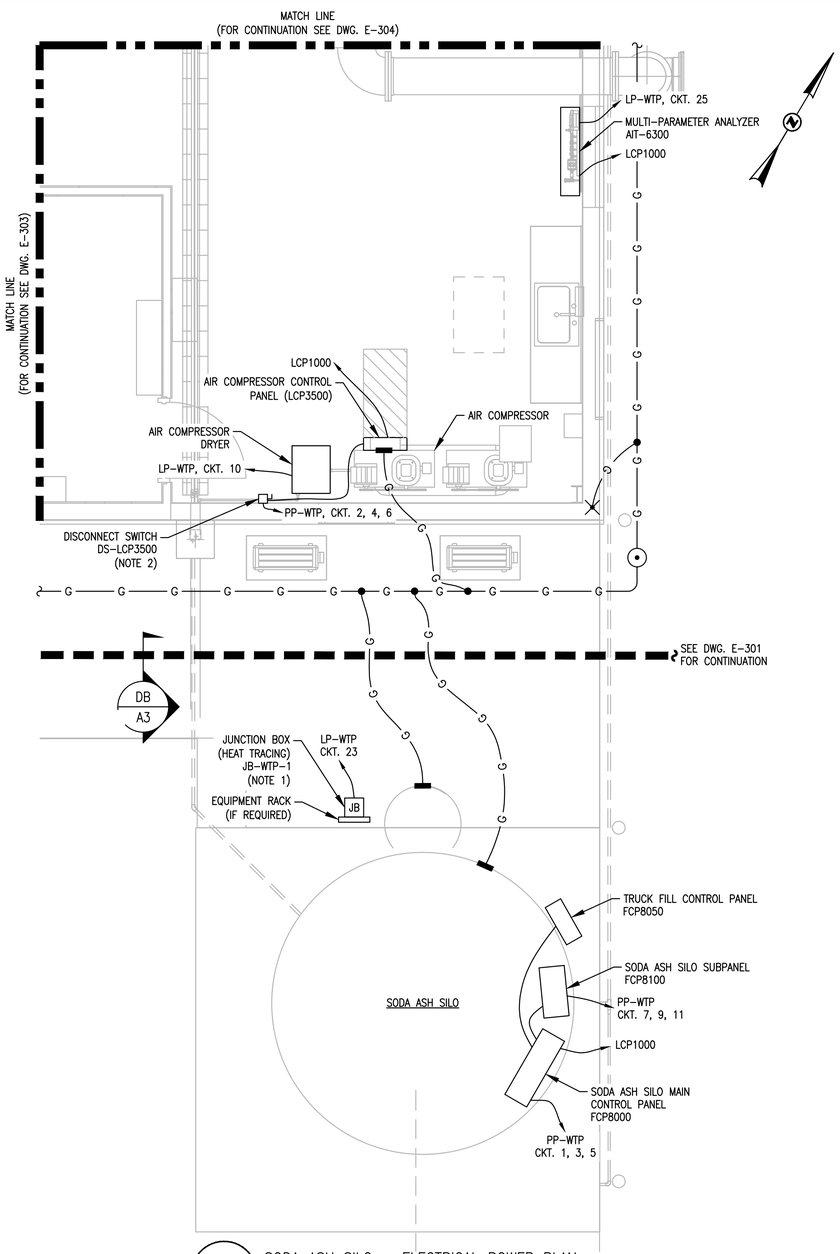

1 SODA ASH SILO – ELECTRICAL POWER PLAN

SCALE: 1" = 3'

GRAPHIC SCALE

3 0 1.5 3 6 12

(IN FEET)
1 inch = 3 ft.

NOTES:

1. THE CONTRACTOR SHALL PROVIDE AND INSTALL A LOCAL NEMA 4X SS JUNCTION BOX FOR TERMINATION OF 120V HEAT TRACING POWER WIRING. THE CONTRACTOR SHALL PROVIDE AND INSTALL A COMPLETE HEAT TRACING SYSTEM FOR EXPOSED WATER PIPING, INCLUDING ASSOCIATED CABLES/CONDUITS, THERMOSTATS, SELF REGULATING HEATING CABLE (SW/TT U.O.N.), PIPING INSULATION, ON/OFF INDICATING LIGHTS, ETC. ALL COMPONENTS SHALL BE CORROSION RESISTANT – NEMA 4X, RATED FOR OUTDOOR INSTALLATION AND RATED FOR HAZARDOUS AREA WHERE APPLICABLE.

2. THE CONTRACTOR SHALL PROVIDE AND INSTALL DISCONNECT SWITCH – 30A, 3P, 480V IN NEMA 12 STAINLESS STEEL ENCLOSURE.

LEGEND:

– DIRECT BURIED UNDERGROUND DUCTBANK

RC RC – REINFORCED CONCRETE ENCASED UNDERGROUND DUCTBANK

EDEC, INC.
4120 CHATTAHOOCHEE TRACE
SUITE A
DULUTH, GEORGIA 30097
TEL. (770) 493-8685

GMC

2660 Eastchase Lane
Suite 200
Montgomery, AL 36117
T 334.271.3200

1" 5" 0" 1"

ISSUE	DATE
ISSUED FOR BID	03-15-25

DESIGNER: DV
DRAWN BY: DV

COUNTY RD 29 WATER TREATMENT PLANT
PRATTVILLE WATER WORKS
PRATTVILLE, AL

CMGM230095

ALABAMA LICENSED No. 30182 PROFESSIONAL ENGINEER ALEC ZAYCHIK

SODA ASH - ELECTRICAL POWER PLAN

E-305

This drawing is and shall remain the property of Goodwyn, Mills and Cawood, Inc. (GMC) and Goodwyn Mills Cawood LLC (GMC). Unauthorized use of any kind including use on other projects is prohibited. In the event that a conflict arises between the sealed drawings and the electronic files, the sealed drawings will govern.

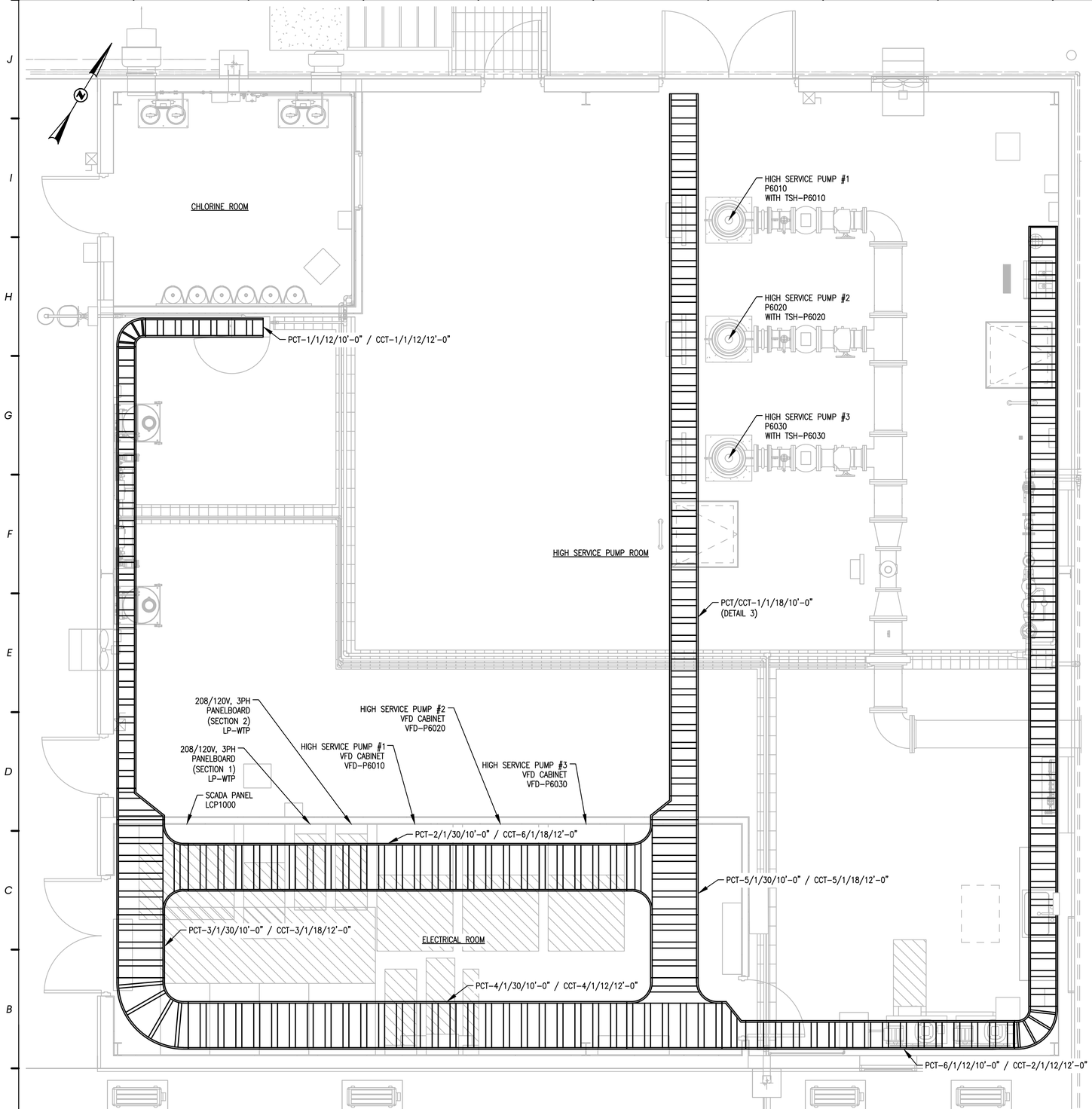

1 CABLE TRAY PLAN
SCALE: 1" = 3'

GRAPHIC SCALE
3 0 1.5 3 6 12
(IN FEET)
1 inch = 3 ft.

NOTES:

1. LOCATIONS ARE APPROXIMATE AND MAY BE ADJUSTED TO SUITE THE ELECTRIC INSTALLATION AND FINAL AS-BUILT EQUIPMENT SIZES.
2. ALL CABLE TRAYS SHALL BE ALUMINUM, LADDER TYPE.

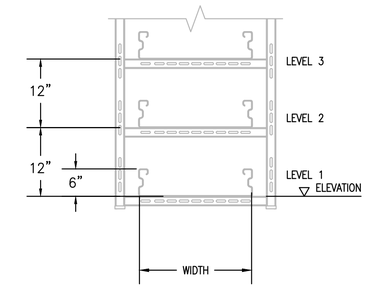

PCT-XX/XX/XX/XX'-XX"

CABLE TRAY TYPE
PCT - POWER CABLE TRAY (UP TO 600V)
CCT- CONTROL CABLE TRAY
(UP TO 120V CONTROLS AND SIGNALS)

ELEVATION OF TRAY
WIDTH OF TRAY IN INCH
NUMBERS OF LEVELS
CABLE TRAY NUMBER

2 CABLE TRAY DETAIL

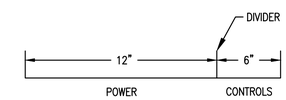

3 PCT/CCT-0/1/18/10'-0"

EDEC, INC.
4120 CHATTAHOOCHEE TRACE
SUITE A
DULUTH, GEORGIA 30097
TEL. (770) 493-8685

GMC

2660 Eastchase Lane
Suite 200
Montgomery, AL 36117
T 334.271.3200

1" 5" 0" 1"

ISSUE	DATE
ISSUED FOR BID	03-15-25

DESIGNER: DV
DRAWN BY: DV

COUNTY RD 29 WATER TREATMENT PLANT
PRATTVILLE WATER WORKS
PRATTVILLE, AL

CMGM230095

ALABAMA LICENSED No. 30182 PROFESSIONAL ENGINEER ALEC ZAYCHIK

CABLE TRAY PLAN

E-306

This drawing is and shall remain the property of Goodwyn, Mills and Cawood, Inc. (GMC) and Goodwyn Mills Cawood LLC (GMC). Unauthorized use of any kind including use on other projects is prohibited. In the event that a conflict arises between the sealed drawings and the electronic files, the sealed drawings will govern.

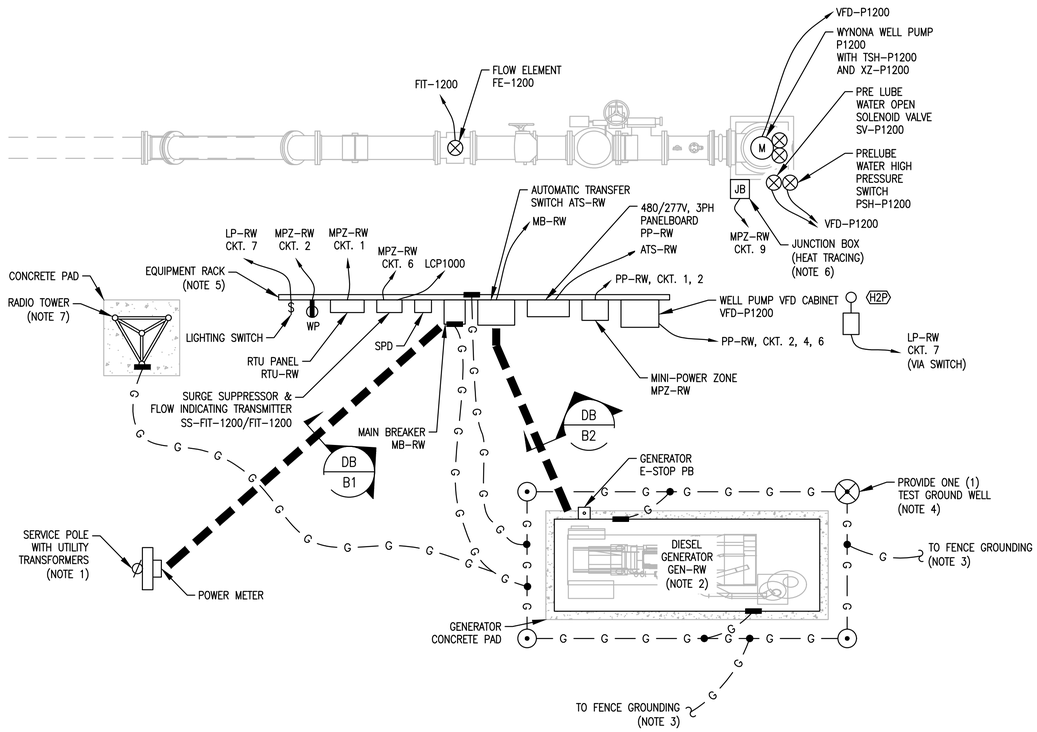

1 WYNONA WELL PUMP – ELECTRICAL SITE PLAN

SCALE: 1" = 3'

GRAPHIC SCALE

3 0 1.5 3 6 12

(IN FEET)
1 inch = 3 ft.

NOTES:

1. THE CONTRACTOR SHALL COORDINATE ACTUAL UTILITY TRANSFORMER LOCATION IN THE FIELD AND ADJUST SECONDARY CABLES/CONDUITS ROUTING ACCORDINGLY. UTILITY COMPANY SHALL PROVIDE AND INSTALL HIGH VOLTAGE PRIMARIES FROM POINT OF SERVICE TO NEW TRANSFORMER.

2. THE CONTRACTOR SHALL PROVIDE AND INSTALL STAND–BY GENERATOR IN LOCATION AS SHOWN AND WITH THE REQUIRED WORKING CLEARANCES. REFER TO ONE LINE DIAGRAM ON DWG. E–111 FOR FURTHER REQUIREMENTS. THE CONTRACTOR SHALL PROVIDE GENERATOR PAD AS PER DETAIL "E" ON DWG. E–901.

3. THE CONTRACTOR SHALL GROUND FENCE AT TWO (2) PLACES AS REQUIRED BY NEC ARTICLE 250.194.

4. THE CONTRACTOR SHALL PROVIDE A GROUND GRID CONSISTING OF 3/4" DIAMETER x 10' LONG COPPER CLAD GROUND RODS. THE RODS SHALL BE DRIVEN IN GROUND CONNECTED TOGETHER WITH #1 AWG BARE STRANDED COPPER CONDUCTORS. PROVIDE A GROUND WELL FOR ONE ROD. SEE DETAIL "C" AND "D" ON DWG. E–901 FOR GROUND WELL INSTALLATION DETAILS.

5. THE CONTRACTOR SHALL PROVIDE AND INSTALL EQUIPMENT RACK SUPPORT AS SHOWN. THE CONTRACTOR IS RESPONSIBLE TO FIELD VERIFY EXACT LOCATION OF EQUIPMENT RACK TO PROVIDE ADEQUATE CLEARANCES FOR ALL EQUIPMENT. SEE DETAIL "F" ON DWG. E–901 FOR INSTALLATION DETAILS.

7. THE CONTRACTOR SHALL PROVIDE AND INSTALL A LOCAL NEMA 3R JUNCTION BOX FOR TERMINATION OF 120V HEAT TRACING POWER WIRING. THE CONTRACTOR SHALL PROVIDE AND INSTALL A COMPLETE HEAT TRACING SYSTEM FOR EXPOSED WATER PIPING, INCLUDING ASSOCIATED CABLES/CONDUITS, THERMOSTATS, SELF REGULATING HEATING CABLE (5W/FT U.O.N.), PIPING INSULATION, ON/OFF INDICATING LIGHTS, ETC. ALL COMPONENTS SHALL BE CORROSION RESISTANT – NEMA 4X, RATED FOR OUTDOOR INSTALLATION.

8. THE SYSTEM INTEGRATOR SHALL PROVIDE AND THE CONTRACTOR SHALL INSTALL A RADIO TOWER. THE CONTRACTOR SHALL COORDINATE THE INSTALLATION WITH THE SYSTEM INTEGRATOR AND SHALL CONTACT THE SYSTEM INTEGRATOR AT LEAST ONE WEEK PRIOR TO INSTALLATION. THE RADIO TOWER SHALL BE INSTALLED ON A 4 FT X 4 FT CONCRETE BASE AND SHALL BE BY ROHN PRODUCTS, LLC, OR APPROVED EQUAL. THE SYSTEM INTEGRATOR SHALL PERFORM A RADIO SURVEY, CONFIRM THE INSTALLATION CONDITIONS, AND DETERMINE THE REQUIRED TOWER HEIGHT DURING THE BID PHASE. THE SYSTEM INTEGRATOR SHALL COMMUNICATE THIS INFORMATION TO THE CONTRACTOR SO THAT THE INSTALLATION METHOD CAN BE ADJUSTED AS REQUIRED. THE CONTRACTOR SHALL INCLUDE ALL NECESSARY INSTALLATION HARDWARE TO ENSURE PROPER AND SECURE TOWER INSTALLATION.

LEGEND:

– DIRECT BURIED UNDERGROUND DUCTBANK

RC RC – REINFORCED CONCRETE ENCASED UNDERGROUND DUCTBANK

EDEC, INC.
4120 CHATTAHOOCHEE TRACE
SUITE A
DULUTH, GEORGIA 30097
TEL. (770) 493-8685

GMC

2660 Eastchase Lane
Suite 200
Montgomery, AL 36117
T 334.271.3200

1" 5" 0" 1"

ISSUE	DATE
ISSUED FOR BID	03-15-25

DESIGNER: DV
DRAWN BY: DV

COUNTY RD 29 WATER TREATMENT PLANT
PRATTVILLE WATER WORKS
PRATTVILLE, AL

CMGM230095

ALABAMA LICENSED No. 30182 PROFESSIONAL ENGINEER ALEC ZAYCHIK

WYNONA WELL PUMP - ELECTRICAL SITE PLAN

E-311

This drawing is and shall remain the property of Goodwyn, Mills and Cawood, Inc. (GMC) and Goodwyn Mills Cawood LLC (GMC). Unauthorized use of any kind including use on other projects is prohibited. In the event that a conflict arises between the sealed drawings and the electronic files, the sealed drawings will govern.

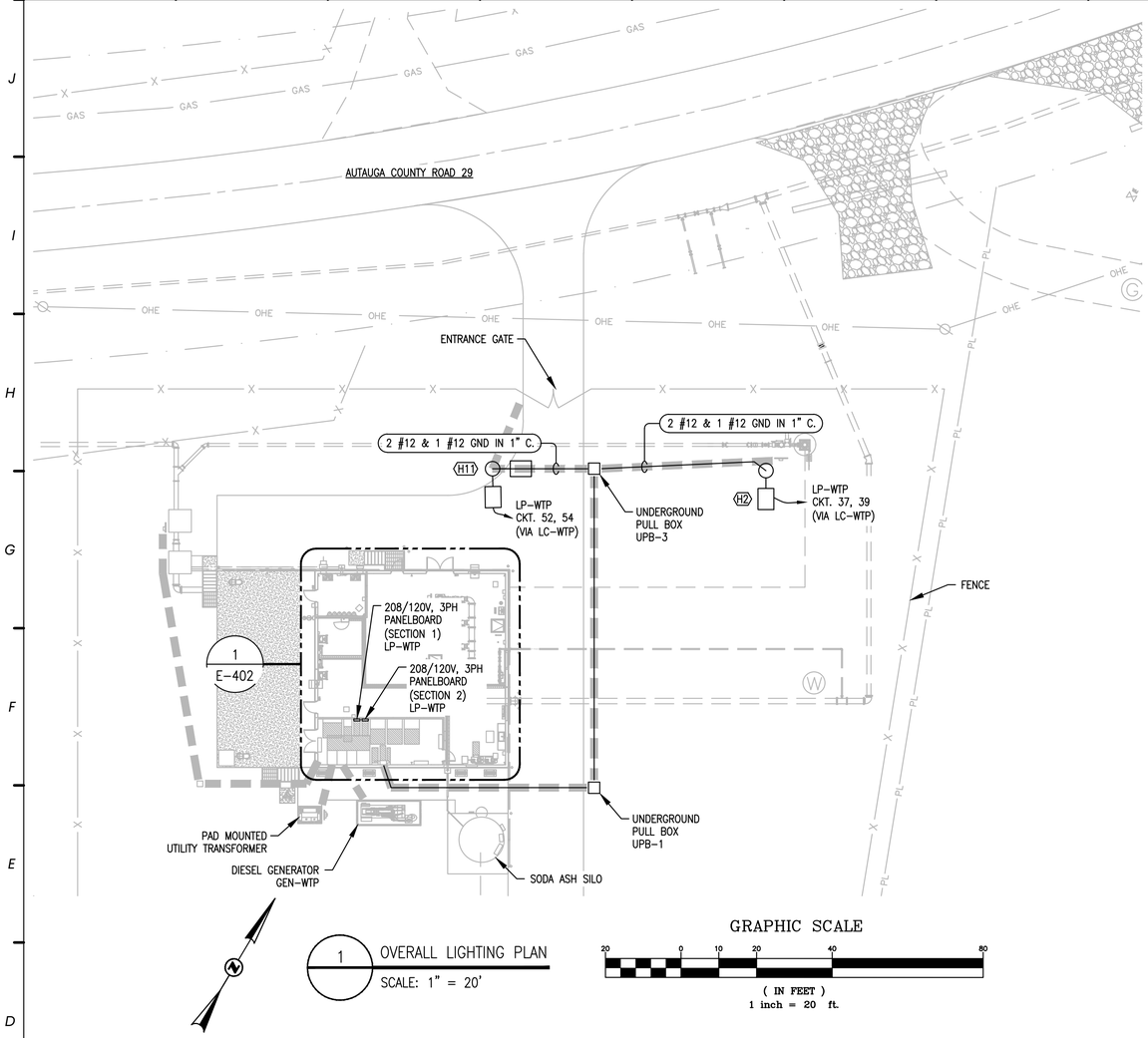

1 OVERALL LIGHTING PLAN

SCALE: 1" = 20'

GRAPHIC SCALE

20 0 10 20 40 80

(IN FEET)
1 inch = 20 ft.

NOTES:

1. SEE DWG. E-201 FOR PANELBOARD SCHEDULE.
2. ALL OUTDOOR LIGHTING SHALL BE RUN THROUGH THE LIGHTING CONTACTOR LOCATED IN ELECTRICAL ROOM. SEE LIGHTING CONTACTOR SCHEMATIC ON DWG. E-606 FOR MORE DETAILS.

GMC

2660 Eastchase Lane
Suite 200
Montgomery, AL 36117
T 334.271.3200

1" 5" 0" 1"

ISSUE	DATE
ISSUED FOR BID	03-15-25

DESIGNER: DV
DRAWN BY: DV

COUNTY RD 29 WATER TREATMENT PLANT
PRATTVILLE WATER WORKS
PRATTVILLE, AL

CMGM230095

ALABAMA LICENSED No. 30182 PROFESSIONAL ENGINEER ALEC ZAYCHIK

OVERALL LIGHTING PLAN

E-401

EDEC

EDEC, INC.
4120 CHATTAHOOCHEE TRACE
SUITE A
DULUTH, GEORGIA 30097
TEL. (770) 493-8685

This drawing is and shall remain the property of Goodwyn, Mills and Cawood, Inc. (GMC) and Goodwyn Mills Cawood LLC (GMC). Unauthorized use of any kind including use on other projects is prohibited. In the event that a conflict arises between the sealed drawings and the electronic files, the sealed drawings will govern.

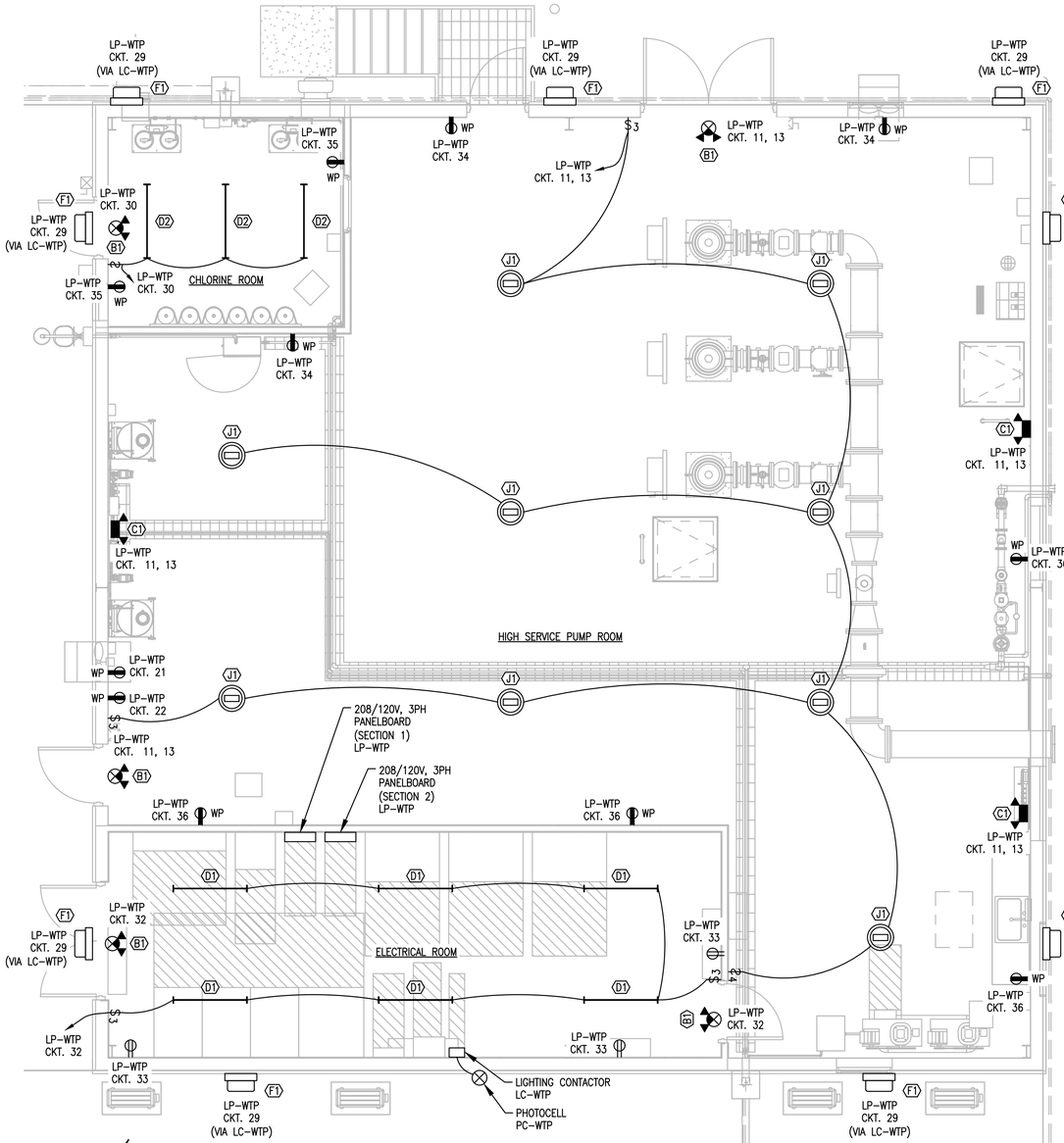

1 OPERATIONS BUILDING LIGHTS & RECEPTACLES PLAN

SCALE: 1" = 4'

GRAPHIC SCALE

(IN FEET)
1/4 inch = 1 ft.

2 OPERATIONS BUILDING – PHOTOMETRIC PLAN

SCALE: 1" = 4'

GRAPHIC SCALE

(IN FEET)
1/4 inch = 1 ft.

#	DESCRIPTION	MIN	MAX	AVERAGE	LIGHT HEIGHT
1	ELECTRICAL ROOM	17.7 FC	34.9 FC	28.6 FC	12 FT
2	HIGH SERVICE PUMP ROOM	15.1 FC	40.7 FC	29.6 FC	18 FT
3	CHLORINE ROOM	19.5 FC	31.9 FC	27.5 FC	9 FT

EDEC, INC.
4120 CHATTAHOOCHEE TRACE
SUITE A
DULUTH, GEORGIA 30097
TEL. (770) 493-8685

GMC

2660 Eastchase Lane
Suite 200
Montgomery, AL 36117
T 334.271.3200

ISSUE	DATE
ISSUED FOR BID	03-15-25

DESIGNER: DV
DRAWN BY: DV

COUNTY RD 29 WATER TREATMENT PLANT
PRATTVILLE WATER WORKS
PRATTVILLE, AL

CMGM230095

ALABAMA LICENSED No. 30182 PROFESSIONAL ENGINEER ALEC ZAYCHIK

OPERATIONS BUILDING LIGHTS & RECEPTACLES PLAN

E-402

This drawing is and shall remain the property of Goodwyn, Mills and Cawood, Inc. (GMC) and Goodwyn Mills Cawood LLC (GMC). Unauthorized use of any kind including use on other projects is prohibited. In the event that a conflict arises between the sealed drawings and the electronic files, the sealed drawings will govern.

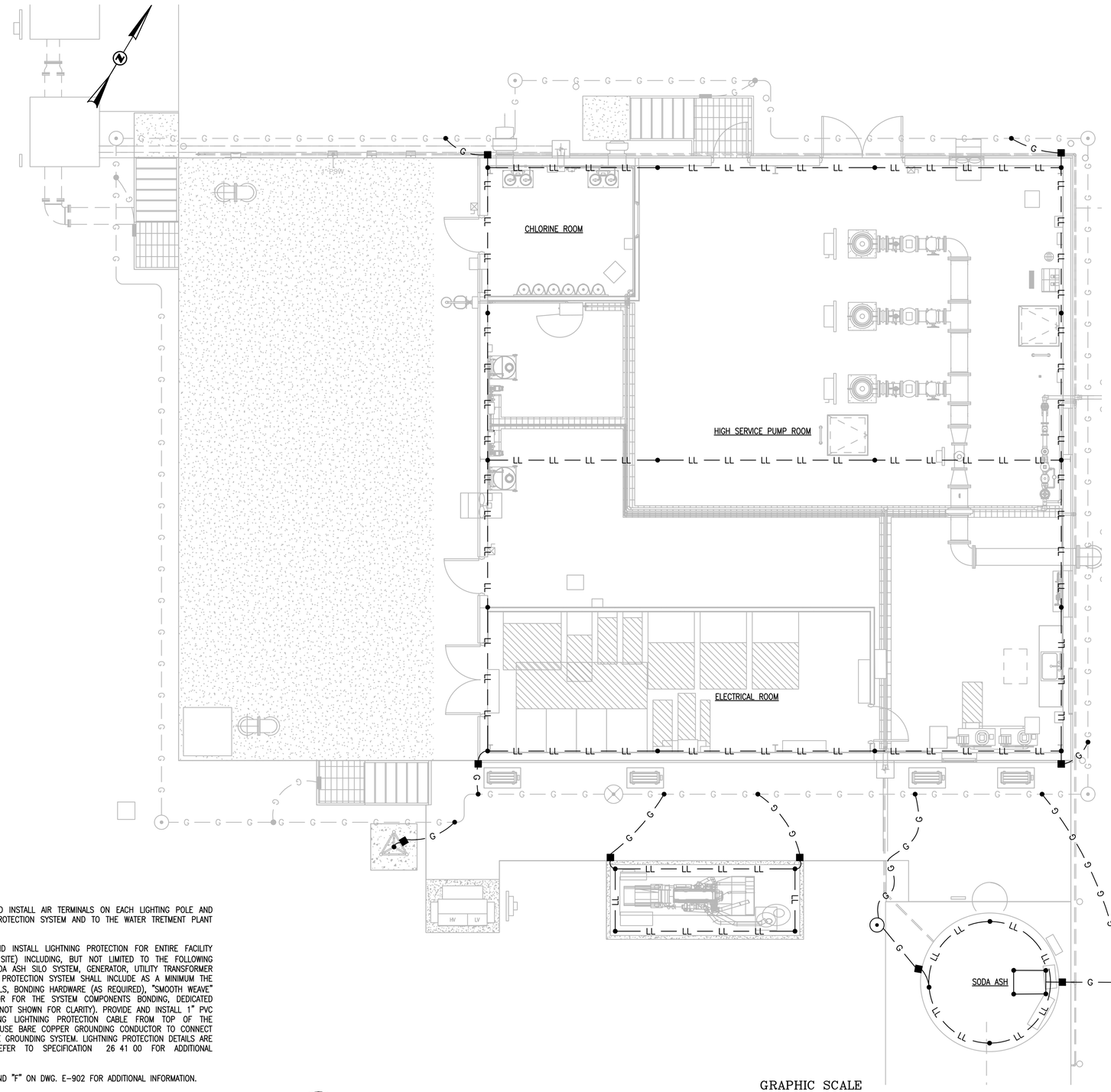

1 OPERATIONS BUILDING – LIGHTNING PROTECTION PLAN
SCALE: 1" = 5'

GRAPHIC SCALE
(IN FEET)
1 inch = 5 ft.

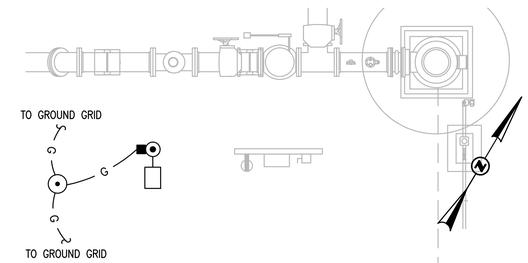

2 CR 29 WELL PUMP – LIGHTNING PROTECTION PLAN
SCALE: 1" = 3'

GRAPHIC SCALE
(IN FEET)
1 inch = 3 ft.

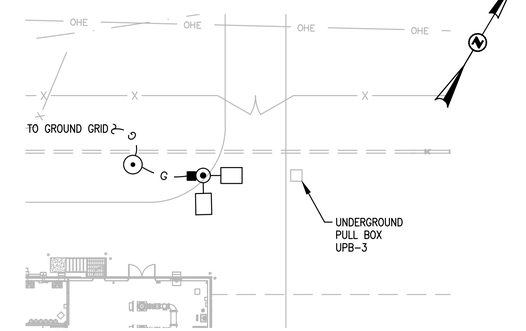

3 ENTRANCE GATE – LIGHTNING PROTECTION PLAN
SCALE: 1" = 20'

GRAPHIC SCALE
(IN FEET)
1 inch = 20 ft.

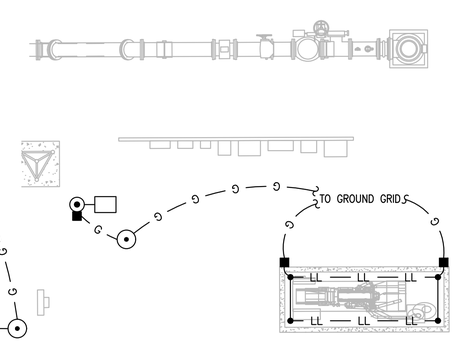

4 WYNONA WELL PUMP – LIGHTNING PROTECTION PLAN
SCALE: 1" = 5'

GRAPHIC SCALE
(IN FEET)
1 inch = 5 ft.

NOTES:

1. THE CONTRACTOR SHALL PROVIDE AND INSTALL AIR TERMINALS ON EACH LIGHTING POLE AND CONNECT DOWNLEAD TO LIGHTNING PROTECTION SYSTEM AND TO THE WATER TRETMENT PLANT GROUNDING SYSTEM.

2. THE CONTRACTOR SHALL PROVIDE AND INSTALL LIGHTNING PROTECTION FOR ENTIRE FACILITY (PLANT AND REMOTE WYNONA WELL SITE) INCLUDING, BUT NOT LIMITED TO THE FOLLOWING AREAS: THE PROCCESS BUILDING, SODA ASH SILO SYSTEM, GENERATOR, UTILITY TRANSFORMER AND LIGHTING POLES. THE LIGHTNING PROTECTION SYSTEM SHALL INCLUDE AS A MINIMUM THE FOLLOWING COMPONENTS: AIR TERMINALS, BONDING HARDWARE (AS REQUIRED), "SMOOTH WEAVE" BARE COPPER GROUNDING CONDUCTOR FOR THE SYSTEM COMPONENTS BONDING, DEDICATED 3/4" x 10' COPPER GROUND RODS (NOT SHOWN FOR CLARITY). PROVIDE AND INSTALL 1" PVC SCHEDULE 80 CONDUIT FOR ROUTING LIGHTNING PROTECTION CABLE FROM TOP OF THE STRUCTURE. THE CONTRACTOR SHALL USE BARE COPPER GROUNDING CONDUCTOR TO CONNECT LIGHTNING PROTECTION SYSTEM TO THE GROUNDING SYSTEM. LIGHTNING PROTECTION DETAILS ARE SHOWN FOR REFERENCE ONLY. REFER TO SPECIFICATION 26 41 00 FOR ADDITIONAL INFORMATION.

3. REFER TO INSTALLATION DETAILS "E" AND "F" ON DWG. E-902 FOR ADDITIONAL INFORMATION.

LIGHTNING PROTECTION SYSTEM LEGEND:

■ – FULL DOWNLEAD TO GROUND

● – AIR TERMINAL

— LL — – LIGHTNING PROTECTION MAIN CONDUCTOR

EDEC, INC.
4120 CHATTAHOOCHEE TRACE
SUITE A
DULUTH, GEORGIA 30097
TEL. (770) 493-8685

GMC

2660 Eastchase Lane
Suite 200
Montgomery, AL 36117
T 334.271.3200

ISSUE	DATE
ISSUED FOR BID	03-15-25

DESIGNER: DV
DRAWN BY: DV

COUNTY RD 29 WATER TREATMENT PLANT
PRATTVILLE WATER WORKS
PRATTVILLE, AL

CMGM230095

ALABAMA LICENSED No. 30182 PROFESSIONAL ENGINEER ALEC ZAYCHIK

LIGHTNING PROTECTION PLAN

E-501

This drawing is and shall remain the property of Goodwyn, Mills and Cawood, Inc. (GMC) and Goodwyn Mills Cawood LLC (GMC). Unauthorized use of any kind including use on other projects is prohibited. In the event that a conflict arises between the sealed drawings and the electronic files, the sealed drawings will govern.

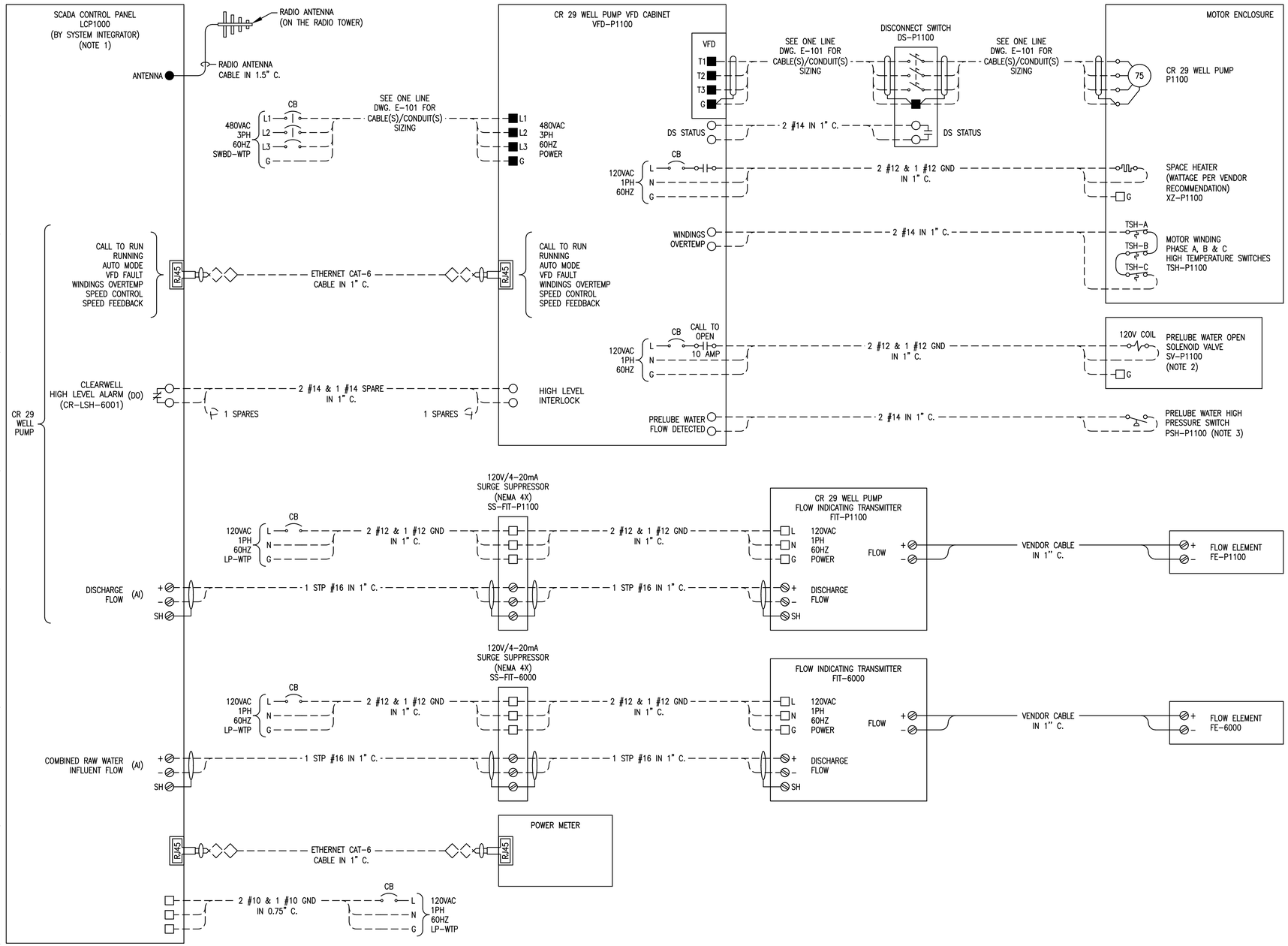

1 SCHEMATIC WIRING DIAGRAM

NOTES:

1. SEE NOTE 2, DWG. I-001 FOR MORE DETAILS.
2. THE CONTRACTOR SHALL PROVIDE AND INSTALL 120V RATED SPRING RETURN NEMA 4 SOLENOID VALVE (SV-P1100) TO CONTROL PRELUBE WATER FLOW.
3. THE CONTRACTOR SHALL PROVIDE AND INSTALL NEMA 4 PRELUBE WATER PRESSURE SWITCH WITH 120V, 2A RATED CONTACT. THE SWITCH SHALL BE RATED FOR POTABLE WATER APPLICATION. THE PRESSURE SWITCH SHALL BE BY ASHCROTT OR APPROVED EQUAL.

LEGEND:

- 120V POWER TERMINAL
- 480V POWER TERMINAL
- MV POWER TERMINAL
- CONTROL TERMINAL
- SIGNAL TERMINAL
- ANTENNA TERMINAL
- RJ-45
- FIBER OPTIC PORT

EDEC, INC.
4120 CHATTAHOOCHEE TRACE
SUITE A
DULUTH, GEORGIA 30097
TEL. (770) 493-8685

GMC

2660 Eastchase Lane
Suite 200
Montgomery, AL 36117
T 334.271.3200

ISSUE	DATE
ISSUED FOR BID	03-15-25

DESIGNER: DV
DRAWN BY: DV

COUNTY RD 29 WATER TREATMENT PLANT
PRATTVILLE WATER WORKS
PRATTVILLE, AL
CMGM230095

ALABAMA LICENSED No. 30182 PROFESSIONAL ENGINEER ALEC ZAYCHIK

SCHEMATIC WIRING DIAGRAM

E-601

This drawing is and shall remain the property of Goodwyn, Mills and Cawood, Inc. (GMC) and Goodwyn Mills Cawood LLC (GMC). Unauthorized use of any kind including use on other projects is prohibited. In the event that a conflict arises between the sealed drawings and the electronic files, the sealed drawings will govern.

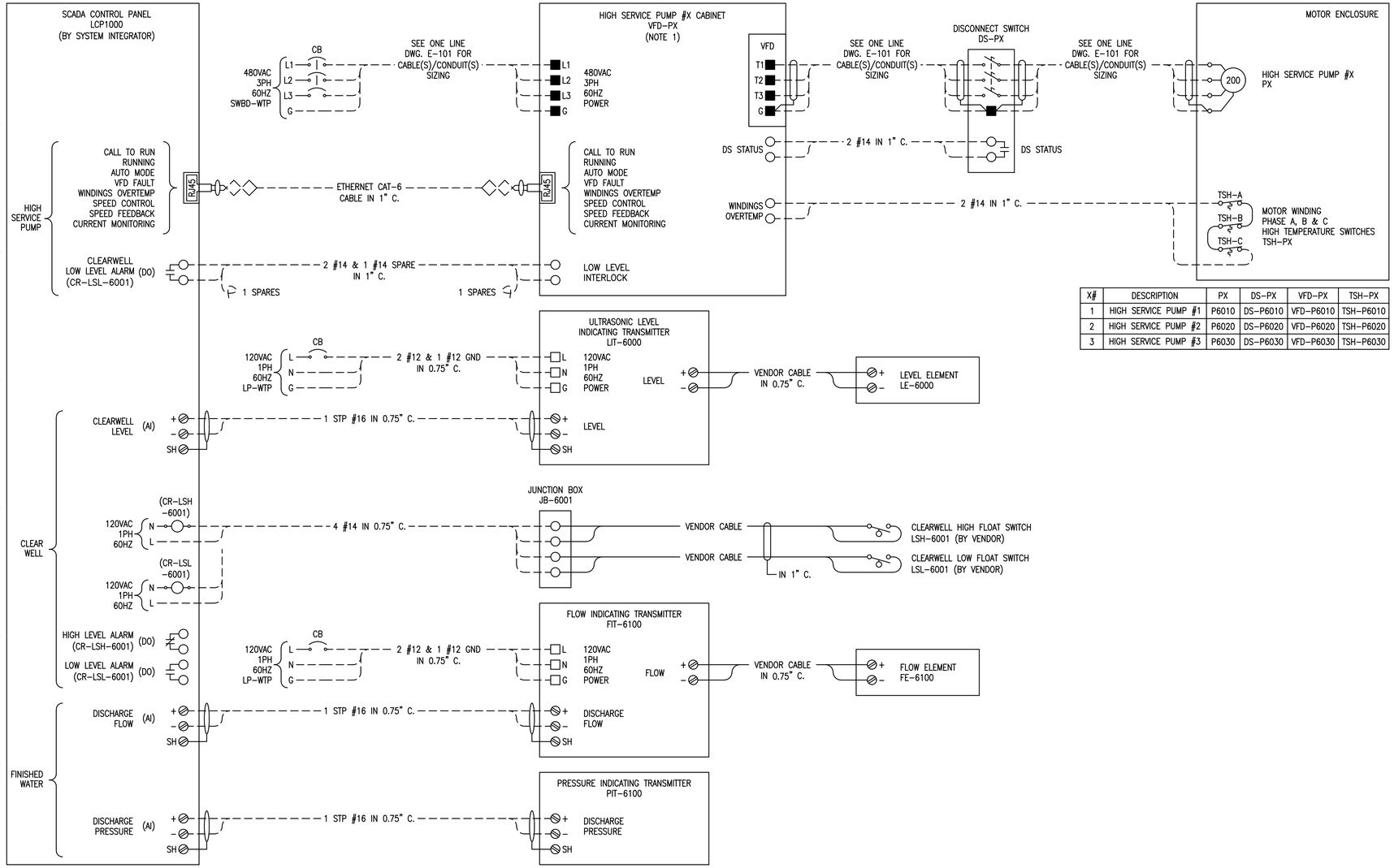

X#	DESCRIPTION	PX	DS-PX	VFD-PX	TSH-PX
1	HIGH SERVICE PUMP #1	P6010	DS-P6010	VFD-P6010	TSH-P6010
2	HIGH SERVICE PUMP #2	P6020	DS-P6020	VFD-P6020	TSH-P6020
3	HIGH SERVICE PUMP #3	P6030	DS-P6030	VFD-P6030	TSH-P6030

1 SCHEMATIC WIRING DIAGRAM

LEGEND:

- □ – 120V POWER TERMINAL
- ■ – 480V POWER TERMINAL
- ▨ – MV POWER TERMINAL
- ○ – CONTROL TERMINAL
- ⊘ – SIGNAL TERMINAL
- ● – ANTENNA TERMINAL
- RJ45 – RJ-45
- TX/RX – FIBER OPTIC PORT

EDEC, INC.
4120 CHATTAHOOCHEE TRACE
SUITE A
DULUTH, GEORGIA 30097
TEL. (770) 493-8685

GMC

2660 Eastchase Lane
Suite 200
Montgomery, AL 36117
T 334.271.3200

ISSUE	DATE
ISSUED FOR BID	03-15-25

DESIGNER: DV
DRAWN BY: DV

COUNTY RD 29 WATER TREATMENT PLANT
PRATTVILLE WATER WORKS
PRATTVILLE, AL

CMGM230095

ALABAMA LICENSED No. 30182 PROFESSIONAL ENGINEER ALEC ZAYCHIK

SCHEMATIC WIRING DIAGRAM

E-602

This drawing is and shall remain the property of Goodwyn, Mills and Cawood, Inc. (GMC) and Goodwyn Mills Cawood LLC (GMC). Unauthorized use of any kind including use on other projects is prohibited. In the event that a conflict arises between the sealed drawings and the electronic files, the sealed drawings will govern.

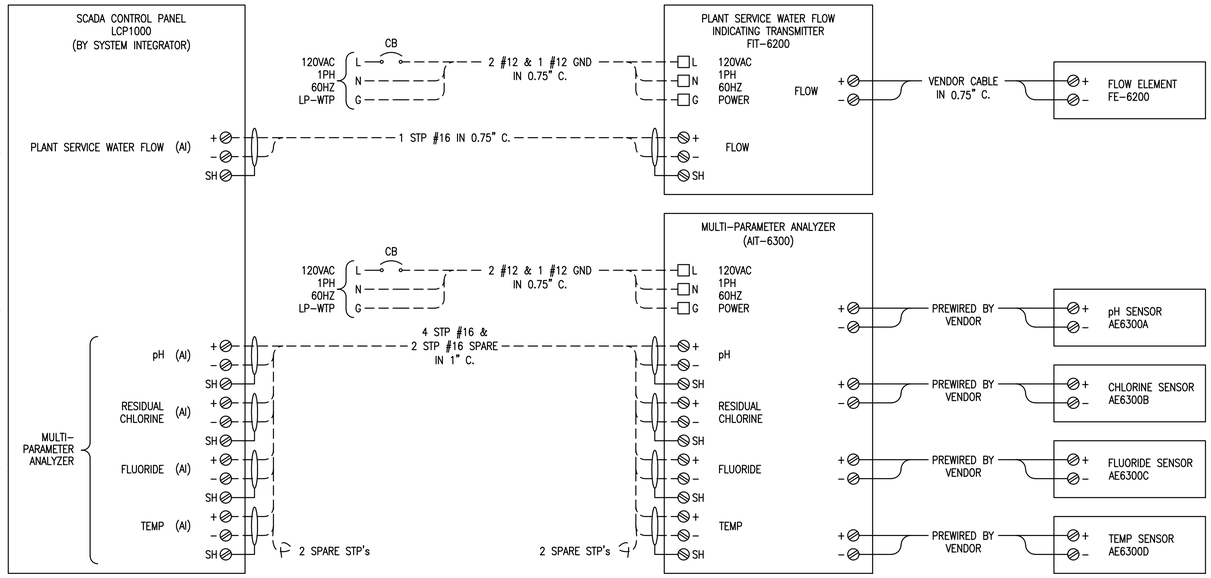

1 SCHEMATIC WIRING DIAGRAM

LEGEND:

- 120V POWER TERMINAL
- 480V POWER TERMINAL
- MV POWER TERMINAL
- CONTROL TERMINAL
- SIGNAL TERMINAL
- ANTENNA TERMINAL
- RJ45 – RJ-45
- TX/RX – FIBER OPTIC PORT

EDEC, INC.
4120 CHATTAHOOCHEE TRACE
SUITE A
DULUTH, GEORGIA 30097
TEL. (770) 493-8685

GMC

2660 Eastchase Lane
Suite 200
Montgomery, AL 36117
T 334.271.3200

1" 5" 0" 1"

ISSUE	DATE
ISSUED FOR BID	03-15-25

DESIGNER: DV
DRAWN BY: DV

COUNTY RD 29 WATER TREATMENT PLANT
PRATTVILLE WATER WORKS
PRATTVILLE, AL

CMGM230095

ALABAMA LICENSED No. 30132 PROFESSIONAL ENGINEER ALEC ZAYCHIK

SCHEMATIC WIRING DIAGRAM

E-603

This drawing is and shall remain the property of Goodwyn, Mills and Cawood, Inc. (GMC) and Goodwyn Mills Cawood LLC (GMC). Unauthorized use of any kind including use on other projects is prohibited. In the event that a conflict arises between the sealed drawings and the electronic files, the sealed drawings will govern.

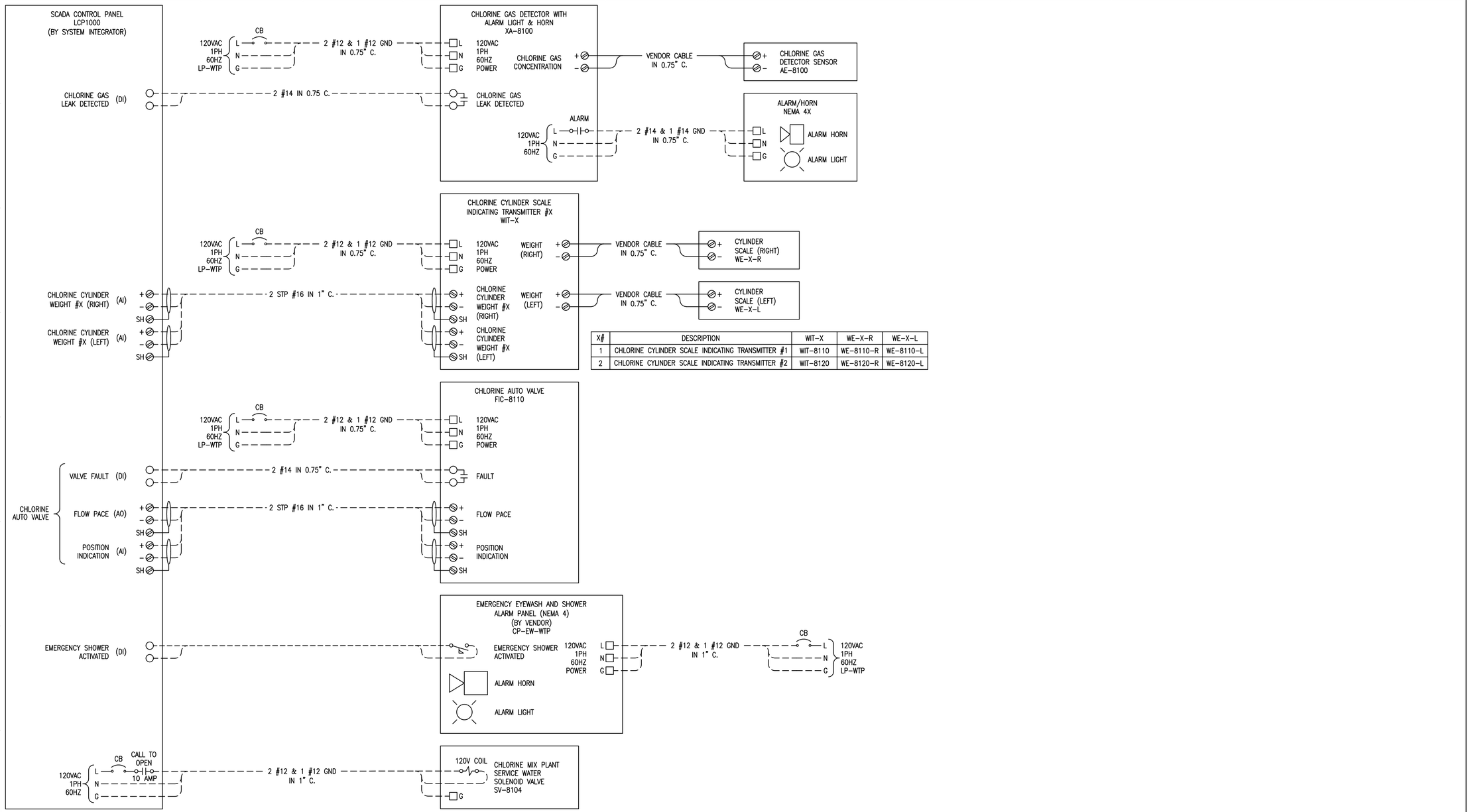

X#	DESCRIPTION	WIT-X	WE-X-R	WE-X-L
1	CHLORINE CYLINDER SCALE INDICATING TRANSMITTER #1	WIT-8110	WE-8110-R	WE-8110-L
2	CHLORINE CYLINDER SCALE INDICATING TRANSMITTER #2	WIT-8120	WE-8120-R	WE-8120-L

1 CHLORINE – SCHEMATIC WIRING DIAGRAM

LEGEND:
- 120V POWER TERMINAL
- 480V POWER TERMINAL
- MV POWER TERMINAL
- CONTROL TERMINAL
- SIGNAL TERMINAL
- ANTENNA TERMINAL
- RJ-45
- FIBER OPTIC PORT

EDEC, INC.
4120 CHATTAHOOCHEE TRACE
SUITE A
DULUTH, GEORGIA 30097
TEL. (770) 493-8685

GMC

2660 Eastchase Lane
Suite 200
Montgomery, AL 36117
T 334.271.3200

ISSUE	DATE
ISSUED FOR BID	03-15-25

DESIGNER: DV
DRAWN BY: DV

COUNTY RD 29 WATER TREATMENT PLANT
PRATTVILLE WATER WORKS
PRATTVILLE, AL

CMGM230095

ALABAMA LICENSED No. 30182 PROFESSIONAL ENGINEER ALEC ZAYCHIK

CHLORINE - SCHEMATIC WIRING DIAGRAM

E-604

This drawing is and shall remain the property of Goodwyn, Mills and Cawood, Inc. (GMC) and Goodwyn Mills Cawood LLC (GMC). Unauthorized use of any kind including use on other projects is prohibited. In the event that a conflict arises between the sealed drawings and the electronic files, the sealed drawings will govern.

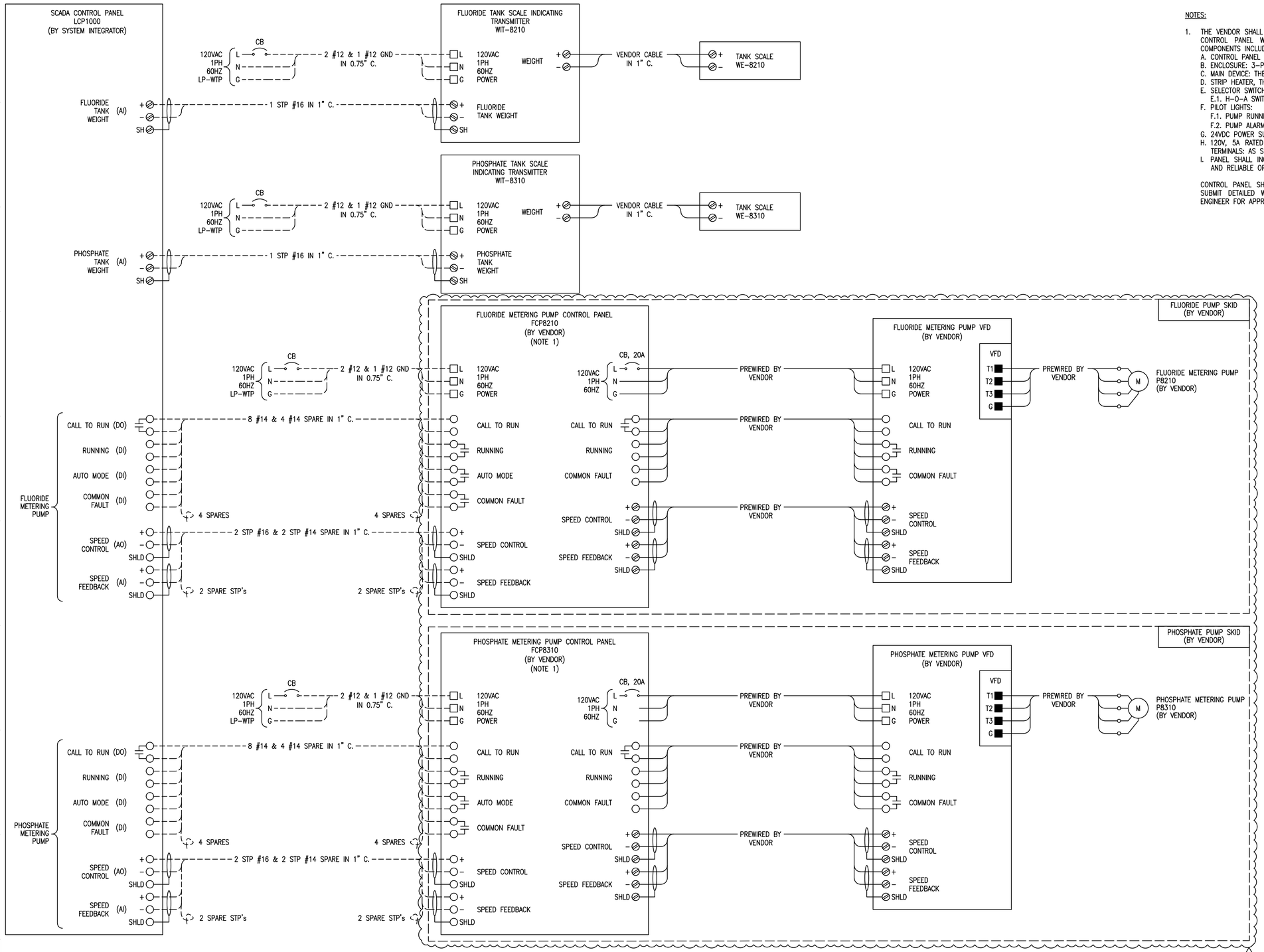

1 SCHEMATIC WIRING DIAGRAM

NOTES:

1. THE VENDOR SHALL PROVIDE AND CONTRACTOR SHALL INSTALL METERING PUMP CONTROL PANEL WHICH INCLUDES ALL NECESSARY POWER AND CONTROLS COMPONENTS INCLUDING, BUT NOT LIMITED TO THE FOLLOWING:
   A. CONTROL PANEL SCCR SHALL BE 10kAIC MINIMUM.
   B. ENCLOSURE: 3-POINT LATCHING WALL MOUNTED NEMA 4X FRP.
   C. MAIN DEVICE: THERMAL MAGNETIC CIRCUIT BREAKER 20A, 120V, 1P.
   D. STRIP HEATER, THERMOSTAT.
   E. SELECTOR SWITCHES:
      E.1. H-O-A SWITCH.
   F. PILOT LIGHTS:
      F.1. PUMP RUNNING (RED);
      F.2. PUMP ALARM (AMBER).
   G. 24VDC POWER SUPPLY.
   H. 120V, 5A RATED DRY CONTACTS, AND SIGNAL WIRING PREWIRED TO FIELD. TERMINALS: AS SHOWN ON WIRING DIAGRAM.
   I. PANEL SHALL INCLUDE ALL NECESSARY COMPONENTS FOR EQUIPMENT SAFE AND RELIABLE OPERATION.

CONTROL PANEL SHALL BE UL508A LISTED AND LABELED. CONTRACTOR SHALL SUBMIT DETAILED WIRING DIAGRAM AND BOM FOR THE CONTROL PANEL TO ENGINEER FOR APPROVAL, PRIOR TO FABRICATION.

LEGEND:

- □ – 120V POWER TERMINAL
- ■ – 480V POWER TERMINAL
- ▨ – MV POWER TERMINAL
- ○ – CONTROL TERMINAL
- ⊘ – SIGNAL TERMINAL
- ● – ANTENNA TERMINAL
- RJ45 – RJ-45
- TX/RX – FIBER OPTIC PORT

EDEC, INC.
4120 CHATTAHOOCHEE TRACE
SUITE A
DULUTH, GEORGIA 30097
TEL. (770) 493-8685

GMC

2660 Eastchase Lane
Suite 200
Montgomery, AL 36117
T 334.271.3200

ISSUE	DATE
ISSUED FOR BID	03-15-25
ADDENDUM 1	03-28-25

DESIGNER: DV
DRAWN BY: DV

COUNTY RD 29 WATER TREATMENT PLANT
PRATTVILLE WATER WORKS
PRATTVILLE, AL

CMGM230095

ALABAMA LICENSED No. 30182 PROFESSIONAL ENGINEER ALEC ZAYCHIK

SCHEMATIC WIRING DIAGRAM

E-605

This drawing is and shall remain the property of Goodwyn, Mills and Cawood, Inc. (GMC) and Goodwyn Mills Cawood LLC (GMC). Unauthorized use of any kind including use on other projects is prohibited. In the event that a conflict arises between the sealed drawings and the electronic files, the sealed drawings will govern.

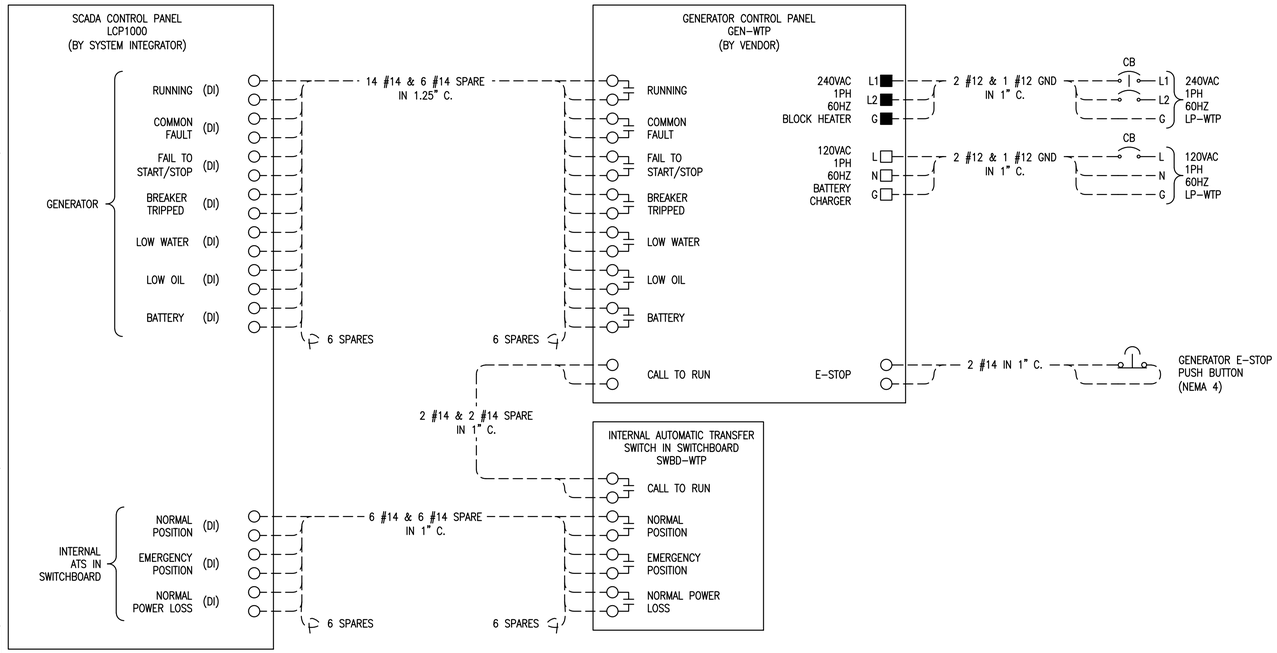

1 GEN-WTP & SWBD-WTP – SCHEMATIC WIRING DIAGRAM

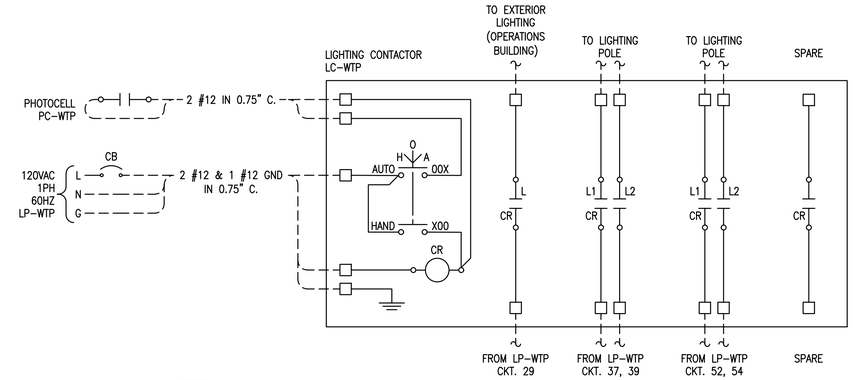

NOTES:

1. "PC" – PHOTOCELL, 120V. LOCATE ON TOP OF ELECTRICAL ROOM. PHOTOCELL SHALL INCLUDE 120V RATED CONTACT FOR CONNECTION TO LIGHTING CONTACTOR. PROVIDE PHOTOCELL COVER TO PREVENT NUISANCE ACTIVATION FROM SITE LIGHTING.
2. MECHANICALLY HELD HEAVY-DUTY 6 POLES, 20A RATED LIGHTING CONTACTOR WITH 120V COIL VOLTAGE (EATON CLASS ECCO3 OR ACCEPTED EQUAL). TAG THE CONDUCTORS ON THE LINE SIDE OF THE LIGHTING CONTACTOR WITH THEIR RESPECTIVE CIRCUIT NUMBER.
3. THE CONTRACTOR SHALL INSTALL LIGHTING CONTACTOR IN NEMA 1 CABINET.
4. THE CONTRACTOR SHALL USE #12 AWG POWER CONDUCTORS FOR LIGHTING POWER WIRING UNLESS OTHERWISE SPECIFIED ON THE LIGHTING PLANS, WHERE UPSIZED CONDUCTORS ARE REQUIRED TO MITIGATE VOLTAGE DROP.

2 LIGHTING CONTACTOR LC-WTP – SCHEMATIC WIRING DIAGRAM

EDEC, INC.
4120 CHATTAHOOCHEE TRACE
SUITE A
DULUTH, GEORGIA 30097
TEL. (770) 493-8685

GMC

2660 Eastchase Lane
Suite 200
Montgomery, AL 36117
T 334.271.3200

1" 5" 0" 1"

ISSUE	DATE
ISSUED FOR BID	03-15-25

DESIGNER: DV
DRAWN BY: DV

COUNTY RD 29 WATER TREATMENT PLANT
PRATTVILLE WATER WORKS
PRATTVILLE, AL

CMGM230095

ALABAMA LICENSED No. 30182 PROFESSIONAL ENGINEER ALEC ZAYCHIK

GEN, ATS AND LC SCHEMATIC WIRING DIAGRAM

E-606

This drawing is and shall remain the property of Goodwyn, Mills and Cawood, Inc. (GMC) and Goodwyn Mills Cawood LLC (GMC). Unauthorized use of any kind including use on other projects is prohibited. In the event that a conflict arises between the sealed drawings and the electronic files, the sealed drawings will govern.

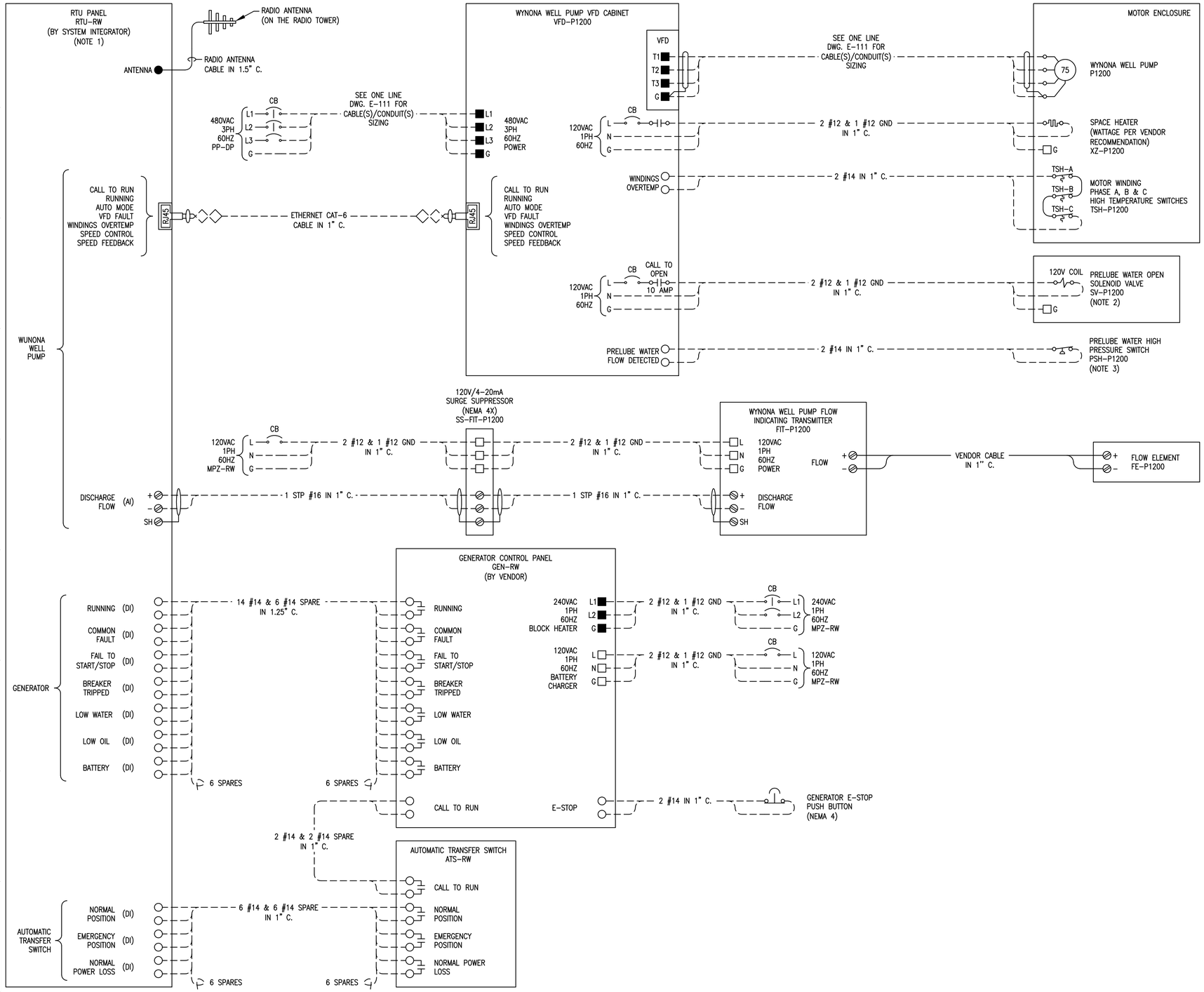

1 SCHEMATIC WIRING DIAGRAM

NOTES:

1. SEE NOTE 1, DWG. I-001 FOR MORE DETAILS.
2. THE CONTRACTOR SHALL PROVIDE AND INSTALL 120V RATED SPRING RETURN NEMA 4 SOLENOID VALVE (SV-P1200) TO CONTROL PRELUBE WATER FLOW.
3. THE CONTRACTOR SHALL PROVIDE AND INSTALL PRELUBE WATER PRESSURE SWITCH WITH 120V, 2A RATED CONTACT. THE SWITCH SHALL BE RATED FOR POTABLE WATER APPLICATION. THE PRESSURE SWITCH SHALL BE BY ASHCROTT OR APPROVED EQUAL.

LEGEND:

- □ – 120V POWER TERMINAL
- ■ – 480V POWER TERMINAL
- ▨ – MV POWER TERMINAL
- ○ – CONTROL TERMINAL
- ⊘ – SIGNAL TERMINAL
- ● – ANTENNA TERMINAL
- RJ45 – RJ-45
- TX RX – FIBER OPTIC PORT
- * – DOOR MOUNTED

EDEC, INC.
4120 CHATTAHOOCHEE TRACE
SUITE A
DULUTH, GEORGIA 30097
TEL. (770) 493-8685

GMC

2660 Eastchase Lane
Suite 200
Montgomery, AL 36117
T 334.271.3200

ISSUE	DATE
ISSUED FOR BID	03-15-25

DESIGNER: DV
DRAWN BY: DV

COUNTY RD 29 WATER TREATMENT PLANT
PRATTVILLE WATER WORKS
PRATTVILLE, AL

CMGM230095

ALABAMA LICENSED No. 30192 PROFESSIONAL ENGINEER ALEC ZAYCHIK

SCHEMATIC WIRING DIAGRAM

E-607

This drawing is and shall remain the property of Goodwyn, Mills and Cawood, Inc. (GMC) and Goodwyn Mills Cawood LLC (GMC). Unauthorized use of any kind including use on other projects is prohibited. In the event that a conflict arises between the sealed drawings and the electronic files, the sealed drawings will govern.

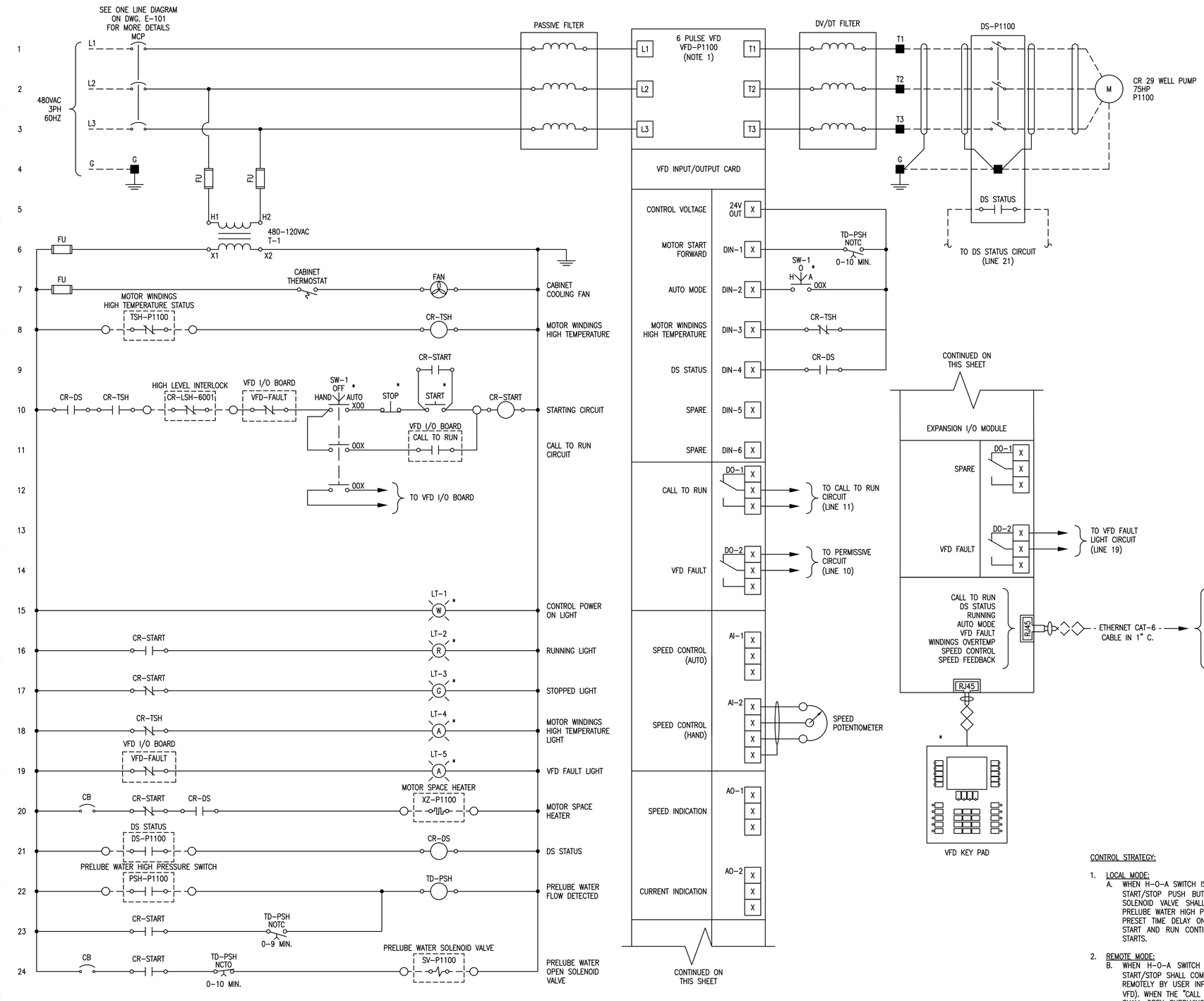

1 CR 29 WELL PUMP VFD – ELEMENTARY DIAGRAM

NOTES:

1. THE CONTRACTOR SHALL PROVIDE AND INSTALL WELL PUMP VFD CABINET WHICH INCLUDES ALL NECESSARY POWER AND CONTROLS COMPONENTS INCLUDING, BUT NOT LIMITED TO THE FOLLOWING:
   - A. CABINET SCCR SHALL BE 42kAIC MINIMUM.
   - B. ENCLOSURE: WALL MOUNTED NEMA 1 WITH INNER DOORS, FOLDING SHELF, INTERIOR LIGHT FIXTURE WITH DOOR SWITCH.
   - C. MAIN DEVICE: THERMAL MAGNETIC CIRCUIT BREAKER 150A, 480V, 3P WITH LOCKABLE DISCONNECT HANDLE.
   - D. VARIABLE FREQUENCY DRIVE (VFD):
     - D.1. CONSTANT TORQUE DRIVE.
     - D.2. 6 PULSE DRIVE WITH MOTOR CIRCUIT PROTECTORS, RATED FOR 75HP MOTOR.
     - D.3. INCLUDE PASSIVE FILTER, DV/DT FILTER, THE CABINET MANUFACTURER SHALL PERFORM A HARMONIC ANALYSIS BASED ON THE SELECTED VFD MODEL TO ENSURE THAT THE HARMONIC DISTORTIONS ARE WITHIN IEEE519 LIMITS AND PROVIDE REPORT FOR ENGINEERS REVIEW.
   - E. 1kVA, 480-240/120V CONTROL POWER TRANSFORMER WITH PRIMARY AND SECONDARY CIRCUIT BREAKERS.
   - F. FAN & THERMOSTAT.
   - G. VFD KEY PAD MOUNTED ON THE FRONT DOOR;
   - H. SPEED POTENTIOMETER (FOR HAND MODE).
   - I. TOGGLE SWITCHES:
     - I.1. H-O-A SWITCH.
   - J. PUSH BUTTONS:
     - J.1. START;
     - J.2. STOP.
   - K. INDICATING LIGHTS FOR:
     - K.1. CONTROL POWER ON (WHITE);
     - K.2. PUMP RUNNING (RED);
     - K.3. PUMP STOPPED (GREEN);
     - K.4. VFD FAULT (AMBER);
     - K.5. WINDINGS OVERTEMP (AMBER).
   - L. MEANS OF I/O's COMMUNICATION:
     - L.1. COMMUNICATION LINKS: ETHERNET/IP (RJ-45).
   - U. HARDWIRED SAFETY INTERLOCKS SHALL INCLUDE:
     - U.1. DISCONNECT SWITCH STATUS;
     - U.2. WINDINGS OVERTEMP;
     - U.3. VFD FAULT.
   - V. THE CABINET SHALL INCLUDE ALL NECESSARY COMPONENTS FOR EQUIPMENT SAFE AND RELIABLE OPERATION.

   THE CABINET SHALL BE MANUFACTURED BY EATON, ALLEN-BRADLEY, SIEMENS OR APPROVED EQUAL MANUFACTURER, THE CABINET SHALL BE UL LISTED AND LABELED. CONTRACTOR SHALL SUBMIT DETAILED WIRING DIAGRAM AND BOM FOR THE CONTROL PANEL TO ENGINEER FOR APPROVAL, PRIOR TO FABRICATION.

2. THE WIRING DIAGRAM IS CONCEPTUAL IN NATURE, THE CONTRACTOR SHALL ADJUST THE DIAGRAMS TO ALLOW PROPER EQUIPMENT OPERATION.

CONTROL STRATEGY:

1. LOCAL MODE:
   - A. WHEN H-O-A SWITCH IS PLACED IN HAND POSITION, THE PUMP SHALL BE OPERATED BY START/STOP PUSH BUTTONS. WHEN START PUSH BUTTON IS PRESSED, THE PRELUBE SOLENOID VALVE SHALL OPEN SUPPLYING WATER TO THE PUMP. CLOSURE OF THE PRELUBE WATER HIGH PRESSURE SWITCH CONTACT SHALL START THE COUNTDOWN OF THE PRESET TIME DELAY ON THE TIMER. AFTER THE DELAY IS EXPIRED, THE PUMP SHALL START AND RUN CONTINUOUSLY. THE PRELUBE VALVE SHALL CLOSE WHEN THE PUMP STARTS.

2. REMOTE MODE:
   - B. WHEN H-O-A SWITCH IS PLACED IN AUTO POSITION, THE CONTROL OF THE PUMP START/STOP SHALL COME FROM THE VFD DRY "CALL TO RUN" CONTACT (TO BE INITIATED REMOTELY BY USER INPUT THROUGH SCADA SYSTEM VIA ETHERNET CONNECTION TO THE VFD). WHEN THE "CALL TO RUN" CONTACT CLOSES, THE PRELUBE WATER SOLENOID VALVE SHALL OPEN SUPPLYING WATER TO THE PUMP. CLOSURE OF THE PRELUBE WATER HIGH PRESSURE SWITCH CONTACT SHALL START THE COUNTDOWN OF THE PRESET TIME DELAY ON THE TIMER. AFTER THE DELAY IS EXPIRED, THE PUMP SHALL START AND RUN AS LONG AS THE VFD "CALL TO RUN" CONTACT IS CLOSED. THE PRELUBE VALVE SHALL CLOSE WHEN THE WELL PUMP STARTS.

LEGEND:

- □ – 120V POWER TERMINAL
- ■ – 480V POWER TERMINAL
- ▨ – MV POWER TERMINAL
- ○ – CONTROL TERMINAL
- ⊘ – SIGNAL TERMINAL
- ● – ANTENNA TERMINAL
- RJ45 – RJ-45
- TX / RX – FIBER OPTIC PORT
- * – DOOR MOUNTED

EDEC, INC.
4120 CHATTAHOOCHEE TRACE
SUITE A
DULUTH, GEORGIA 30097
TEL. (770) 493-8685

GMC
2660 Eastchase Lane
Suite 200
Montgomery, AL 36117
T 334.271.3200

ISSUE	DATE
ISSUED FOR BID	03-15-25

DESIGNER: DV
DRAWN BY: DV

COUNTY RD 29 WATER TREATMENT PLANT
PRATTVILLE WATER WORKS
PRATTVILLE, AL
CMGM230095

ALABAMA LICENSED No. 30192 PROFESSIONAL ENGINEER ALEC ZAYCHIK

CR 29 WELL PUMP VFD - ELEMENTARY DIAGRAM

E-608

This drawing is and shall remain the property of Goodwyn, Mills and Cawood, Inc. (GMC) and Goodwyn Mills Cawood LLC (GMC). Unauthorized use of any kind including use on other projects is prohibited. In the event that a conflict arises between the sealed drawings and the electronic files, the sealed drawings will govern.

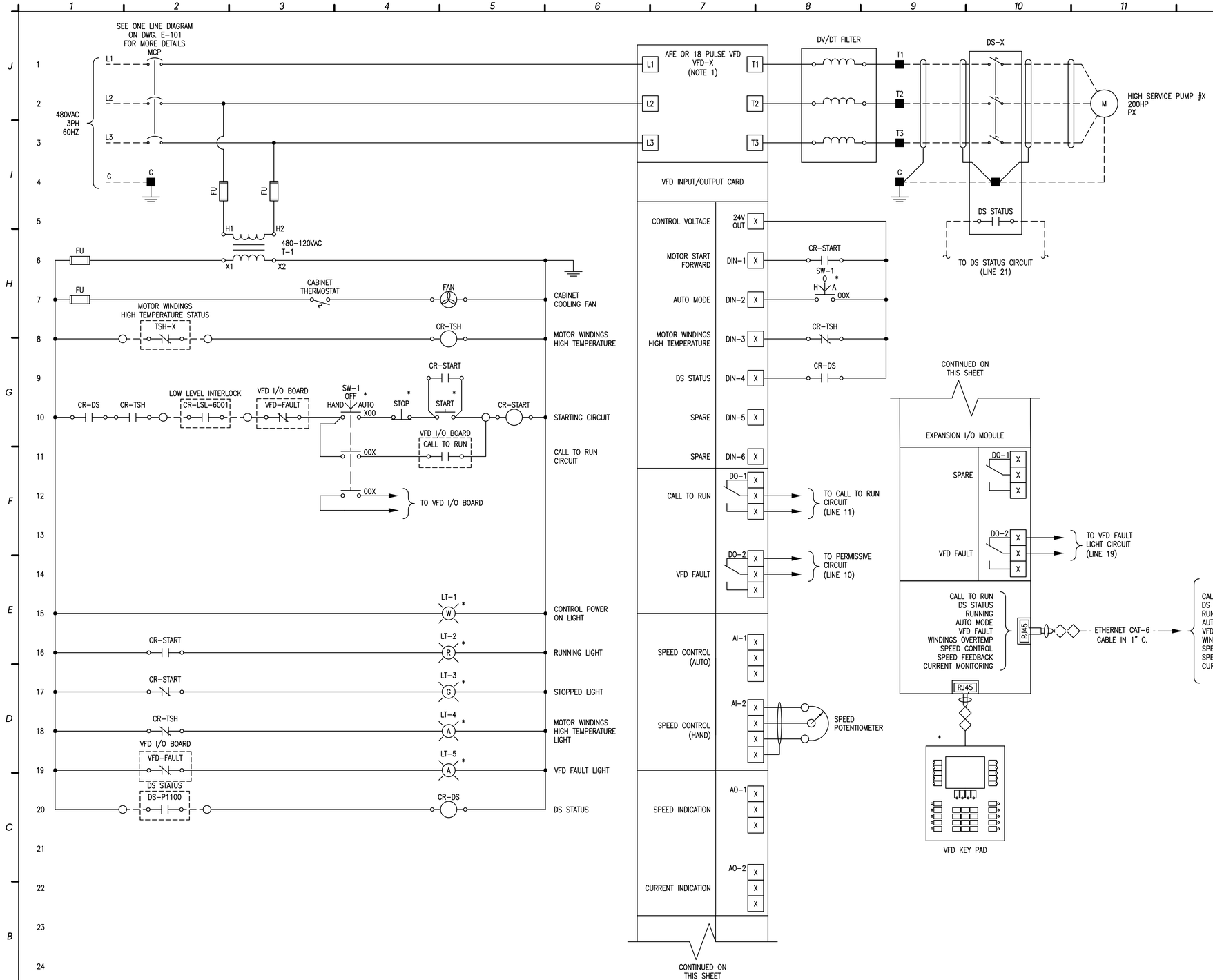

1 HIGH SERVICE PUMP VFD – ELEMENTARY DIAGRAM

#	DESCRIPTION	PX	DS-X	VFD-X	TSH-X
1	HIGH SERVICE PUMP #1	P6010	DS-P6010	VFD-P6010	TSH-P6010
2	HIGH SERVICE PUMP #2	P6020	DS-P6020	VFD-P6020	TSH-P6020
3	HIGH SERVICE PUMP #3	P6030	DS-P6030	VFD-P6030	TSH-P6030

NOTES:

1. THE CONTRACTOR SHALL PROVIDE AND INSTALL HIGH SERVICE PUMP VFD CABINET WHICH INCLUDES ALL NECESSARY POWER AND CONTROLS COMPONENTS INCLUDING, BUT NOT LIMITED TO THE FOLLOWING:
   - A. CABINET SCCR SHALL BE 65kAIC MINIMUM.
   - B. ENCLOSURE: WALL MOUNTED NEMA 1 WITH INNER DOORS, FOLDING SHELF, INTERIOR LIGHT FIXTURE WITH DOOR SWITCH.
   - C. MAIN DEVICE: THERMAL MAGNETIC CIRCUIT BREAKER 400A, 480V, 3P WITH LOCKABLE DISCONNECT HANDLE.
   - D. VARIABLE FREQUENCY DRIVE (VFD):
     - D.1. CONSTANT TORQUE DRIVE.
     - D.2. AFE OR 18 PULSE DRIVE WITH MOTOR CIRCUIT PROTECTORS, RATED FOR 200HP MOTOR.
     - D.3. INCLUDE DV/DT FILTER, THE CABINET MANUFACTURER SHALL PERFORM A HARMONIC ANALYSIS BASED ON THE SELECTED VFD MODEL TO ENSURE THAT THE HARMONIC DISTORTIONS ARE WITHIN IEEE519 LIMITS AND PROVIDE REPORT FOR ENGINEERS REVIEW.
   - E. 1kVA, 480-240/120V CONTROL POWER TRANSFORMER WITH PRIMARY AND SECONDARY CIRCUIT BREAKERS.
   - F. FAN & THERMOSTAT.
   - G. VFD KEY PAD MOUNTED ON THE FRONT DOOR;
   - H. SPEED POTENTIOMETER (FOR HAND MODE).
   - I. TOGGLE SWITCHES:
     - I.1. H-O-A SWITCH.
   - J. PUSH BUTTONS:
     - J.1. START;
     - J.2. STOP.
   - K. INDICATING LIGHTS FOR:
     - K.1. CONTROL POWER ON (WHITE);
     - K.2. PUMP RUNNING (RED);
     - K.3. PUMP STOPPED (GREEN);
     - K.4. VFD FAULT (AMBER);
     - K.5. WINDINGS OVERTEMP (AMBER).
   - L. MEANS OF I/O's COMMUNICATION:
     - L.1. COMMUNICATION LINKS: ETHERNET/IP (RJ-45).
   - U. HARDWIRED SAFETY INTERLOCKS SHALL INCLUDE:
     - U.1. DISCONNECT SWITCH STATUS;
     - U.2. WINDINGS OVERTEMP;
     - U.3. VFD FAULT;
     - U.4. LOW LEVEL INTERLOCK.
   - V. THE CABINET SHALL INCLUDE ALL NECESSARY COMPONENTS FOR EQUIPMENT SAFE AND RELIABLE OPERATION.

   THE CABINET SHALL BE MANUFACTURED BY EATON, ALLEN-BRADLEY, SIEMENS OR APPROVED EQUAL MANUFACTURER, THE CABINET SHALL BE UL LISTED AND LABELED. CONTRACTOR SHALL SUBMIT DETAILED WIRING DIAGRAM AND BOM FOR THE CONTROL PANEL TO ENGINEER FOR APPROVAL, PRIOR TO FABRICATION.

2. THE WIRING DIAGRAM IS CONCEPTUAL IN NATURE, THE CONTRACTOR SHALL ADJUST THE DIAGRAMS TO ALLOW PROPER EQUIPMENT OPERATION.

LEGEND:

- □ – 120V POWER TERMINAL
- ■ – 480V POWER TERMINAL
- ◪ – MV POWER TERMINAL
- ○ – CONTROL TERMINAL
- ⊘ – SIGNAL TERMINAL
- ● – ANTENNA TERMINAL
- RJ45 – RJ-45
- TX RX – FIBER OPTIC PORT
- * – DOOR MOUNTED

EDEC, INC.
4120 CHATTAHOOCHEE TRACE
SUITE A
DULUTH, GEORGIA 30097
TEL. (770) 493-8685

GMC
2660 Eastchase Lane
Suite 200
Montgomery, AL 36117
T 334.271.3200

ISSUE	DATE
ISSUED FOR BID	03-15-25

DESIGNER: DV
DRAWN BY: DV

COUNTY RD 29 WATER TREATMENT PLANT
PRATTVILLE WATER WORKS
PRATTVILLE, AL

CMGM230095

ALABAMA LICENSED No. 30182 PROFESSIONAL ENGINEER ALEC ZAYCHIK

HIGH SERVICE PUMP VFD - ELEMENTARY DIAGRAM

E-609

This drawing is and shall remain the property of Goodwyn, Mills and Cawood, Inc. (GMC) and Goodwyn Mills Cawood LLC (GMC). Unauthorized use of any kind including use on other projects is prohibited. In the event that a conflict arises between the sealed drawings and the electronic files, the sealed drawings will govern.

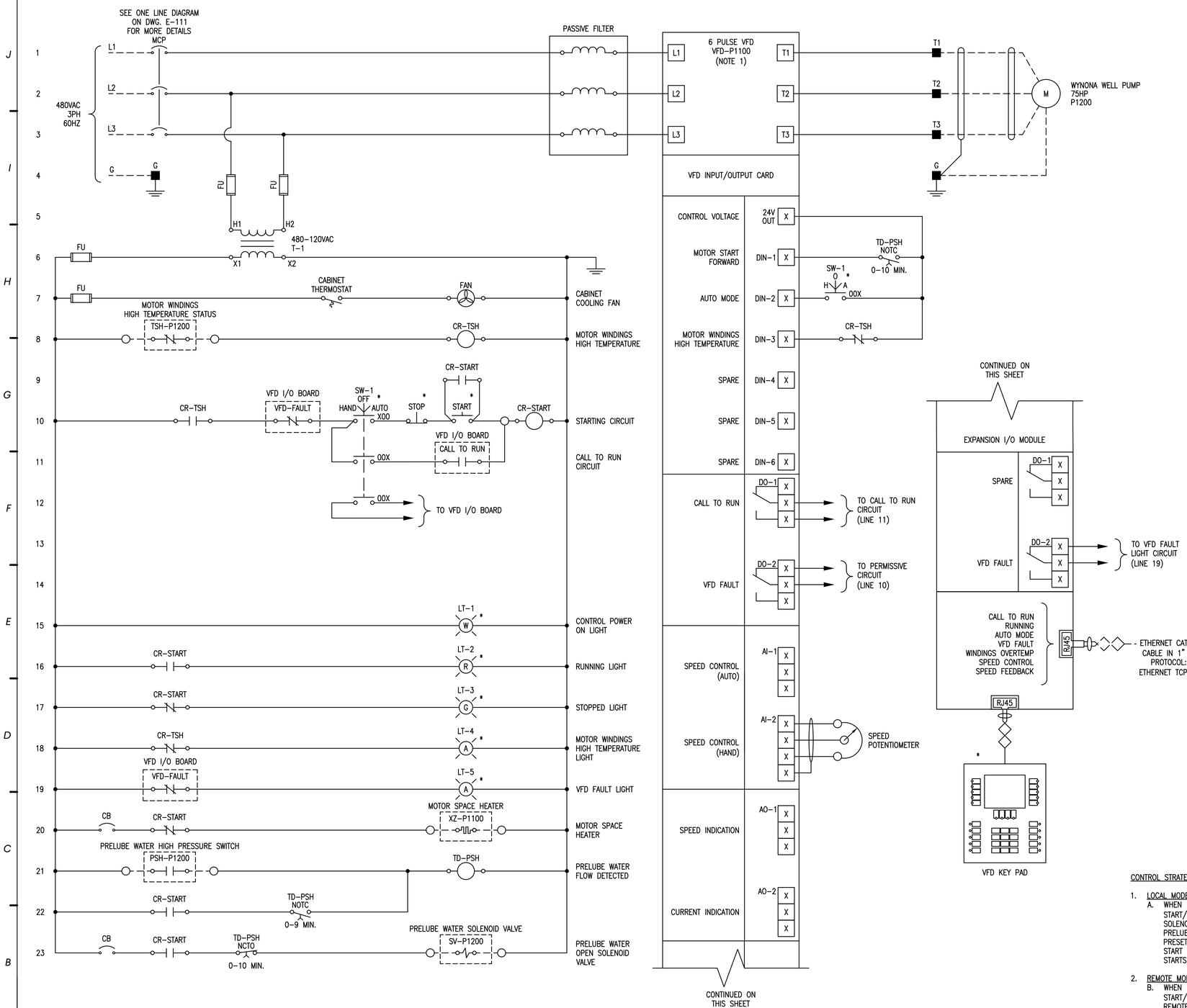

1 WYNONA WELL PUMP VFD – ELEMENTARY DIAGRAM

NOTES:

1. THE EQUIPMENT VENDOR SHALL PROVIDE AND CONTRACTOR SHALL INSTALL WELL PUMP VFD CABINET WHICH INCLUDES ALL NECESSARY POWER AND CONTROLS COMPONENTS INCLUDING, BUT NOT LIMITED TO THE FOLLOWING:
   - A. CABINET SCCR SHALL BE 42kAIC MINIMUM.
   - B. ENCLOSURE: WALL MOUNTED NEMA 3R WITH INNER DOORS, FOLDING SHELF, INTERIOR LIGHT FIXTURE WITH DOOR SWITCH.
   - C. MAIN DEVICE: THERMAL MAGNETIC CIRCUIT BREAKER 150A, 480V, 3P WITH LOCKABLE DISCONNECT HANDLE.
   - D. VARIABLE FREQUENCY DRIVE (VFD):
     - D.1. CONSTANT TORQUE DRIVE.
     - D.2. 6 PULSE DRIVE WITH MOTOR CIRCUIT PROTECTORS, RATED FOR 75HP MOTOR.
     - D.3. INCLUDE PASSIVE FILTER, THE CABINET MANUFACTURER SHALL PERFORM A HARMONIC ANALYSIS BASED ON THE SELECTED VFD MODEL TO ENSURE THAT THE HARMONIC DISTORTIONS ARE WITHIN IEEE519 LIMITS AND PROVIDE REPORT FOR ENGINEERS REVIEW.
   - E. 1kVA, 480-240/120V CONTROL POWER TRANSFORMER WITH PRIMARY AND SECONDARY CIRCUIT BREAKERS.
   - F. EXTERNALLY MOUNTED 480V, 1PH AIR CONDITIONER IN NEMA 3R ENCLOSURE SIZED TO KEEP CABINET INTERNAL TEMPERATURE BELOW 90° F.
   - G. STRIP HEATER, FAN & THERMOSTAT.
   - H. VFD KEY PAD MOUNTED ON THE FRONT DOOR;
   - I. SPEED POTENTIOMETER (FOR HAND MODE).
   - J. TOGGLE SWITCHES:
     - J.1. H-O-A SWITCH.
   - K. PUSH BUTTONS:
     - K.1. START;
     - K.2. STOP.
   - L. INDICATING LIGHTS FOR:
     - L.1. CONTROL POWER ON (WHITE);
     - L.2. PUMP RUNNING (RED);
     - L.3. PUMP STOPPED (GREEN);
     - L.4. VFD FAULT (AMBER);
     - L.5. WINDINGS OVERTEMP (AMBER).
   - M. MEANS OF I/O's COMMUNICATION:
     - M.1. COMMUNICATION LINKS: ETHERNET/IP (RJ-45).
   - U. HARDWIRED SAFETY INTERLOCKS SHALL INCLUDE:
     - U.1. WINDINGS OVERTEMP;
     - U.2. VFD FAULT.
   - V. THE CABINET SHALL INCLUDE ALL NECESSARY COMPONENTS FOR EQUIPMENT SAFE AND RELIABLE OPERATION.

THE CABINET SHALL BE MANUFACTURED BY EATON, ALLEN-BRADLEY, SIEMENS OR APPROVED EQUAL MANUFACTURER, THE CABINET SHALL BE UL LISTED AND LABELED. CONTRACTOR SHALL SUBMIT DETAILED WIRING DIAGRAM AND BOM FOR THE CONTROL PANEL TO ENGINEER FOR APPROVAL, PRIOR TO FABRICATION.

CONTROL STRATEGY:

1. LOCAL MODE:
   - A. WHEN H-O-A SWITCH IS PLACED IN HAND POSITION, THE PUMP SHALL BE OPERATED BY START/STOP PUSH BUTTONS. WHEN START PUSH BUTTON IS PRESSED, THE PRELUBE SOLENOID VALVE SHALL OPEN SUPPLYING WATER TO THE PUMP. CLOSURE OF THE PRELUBE WATER HIGH PRESSURE SWITCH CONTACT SHALL START THE COUNTDOWN OF THE PRESET TIME DELAY ON THE TIMER. AFTER THE DELAY IS EXPIRED, THE PUMP SHALL START AND RUN CONTINUOUSLY. THE PRELUBE VALVE SHALL CLOSE WHEN THE PUMP STARTS.

2. REMOTE MODE:
   - B. WHEN H-O-A SWITCH IS PLACED IN AUTO POSITION, THE CONTROL OF THE PUMP START/STOP SHALL COME FROM THE VFD DRY "CALL TO RUN" CONTACT (TO BE INITIATED REMOTELY BY USER INPUT THROUGH SCADA SYSTEM VIA ETHERNET CONNECTION TO THE VFD). WHEN THE "CALL TO RUN" CONTACT CLOSES, THE PRELUBE WATER SOLENOID VALVE SHALL OPEN SUPPLYING WATER TO THE PUMP. CLOSURE OF THE PRELUBE WATER HIGH PRESSURE SWITCH CONTACT SHALL START THE COUNTDOWN OF THE PRESET TIME DELAY ON THE TIMER. AFTER THE DELAY IS EXPIRED, THE PUMP SHALL START AND RUN AS LONG AS THE VFD "CALL TO RUN" CONTACT IS CLOSED. THE PRELUBE VALVE SHALL CLOSE WHEN THE WELL PUMP STARTS.

LEGEND:

- □ – 120V POWER TERMINAL
- ■ – 480V POWER TERMINAL
- ◪ – MV POWER TERMINAL
- ○ – CONTROL TERMINAL
- ⊘ – SIGNAL TERMINAL
- ● – ANTENNA TERMINAL
- RJ45 – RJ-45
- TX RX – FIBER OPTIC PORT
- * – DOOR MOUNTED

EDEC, INC.
4120 CHATTAHOOCHEE TRACE
SUITE A
DULUTH, GEORGIA 30097
TEL. (770) 493-8685

GMC

2660 Eastchase Lane
Suite 200
Montgomery, AL 36117
T 334.271.3200

ISSUE	DATE
ISSUED FOR BID	03-15-25
DESIGNER:	DV
DRAWN BY:	DV

COUNTY RD 29 WATER TREATMENT PLANT
PRATTVILLE WATER WORKS
PRATTVILLE, AL

CMGM230095

ALABAMA LICENSED No. 30182 PROFESSIONAL ENGINEER ALEC ZAYCHIK

WYNONA WELL PUMP VFD - ELEMENTARY DIAGRAM

E-610

This drawing is and shall remain the property of Goodwyn, Mills and Cawood, Inc. (GMC) and Goodwyn Mills Cawood LLC (GMC). Unauthorized use of any kind including use on other projects is prohibited. In the event that a conflict arises between the sealed drawings and the electronic files, the sealed drawings will govern.

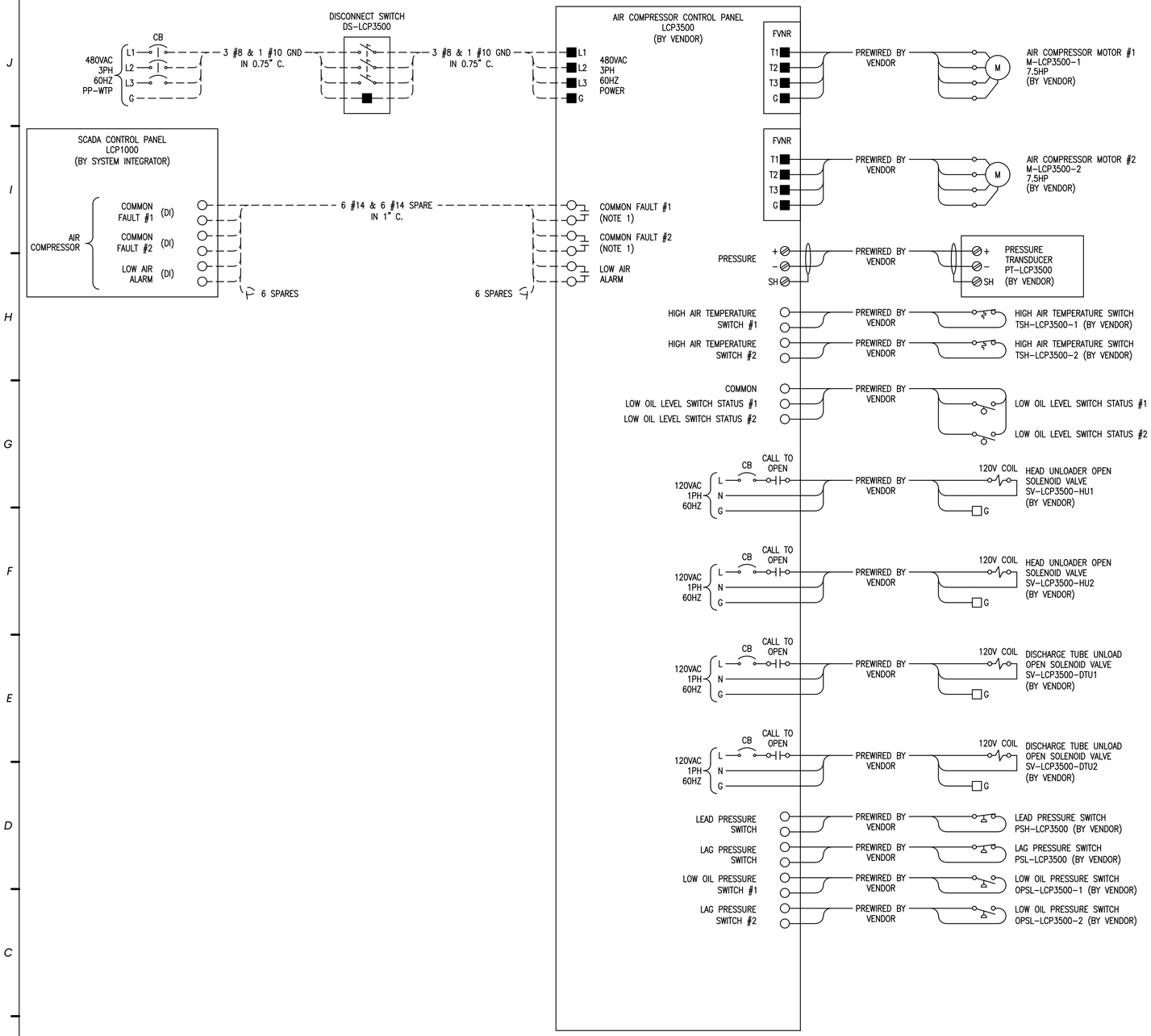

1 AIR COMPRESSOR – SHEMATIC WIRING DIAGRAM

LEGEND:

- □ – 120V POWER TERMINAL
- ■ – 480V POWER TERMINAL
- ▨ – MV POWER TERMINAL
- ○ – CONTROL TERMINAL
- ⊘ – SIGNAL TERMINAL
- ● – ANTENNA TERMINAL
- RJ45 – RJ-45
- TX RX – FIBER OPTIC PORT

EDEC, INC.
4120 CHATTAHOOCHEE TRACE
SUITE A
DULUTH, GEORGIA 30097
TEL. (770) 493-8685

GMC

2660 Eastchase Lane
Suite 200
Montgomery, AL 36117
T 334.271.3200

ISSUE	DATE
ISSUED FOR BID	03-15-25

DESIGNER: DV
DRAWN BY: DV

COUNTY RD 29 WATER TREATMENT PLANT
PRATTVILLE WATER WORKS
PRATTVILLE, AL

CMGM230095

ALABAMA LICENSED No. 30182 PROFESSIONAL ENGINEER ALEC ZAYCHIK

AIR COMPRESSOR - SHEMATIC WIRING DIAGRAM

E-611

This drawing is and shall remain the property of Goodwyn, Mills and Cawood, Inc. (GMC) and Goodwyn Mills Cawood LLC (GMC). Unauthorized use of any kind including use on other projects is prohibited. In the event that a conflict arises between the sealed drawings and the electronic files, the sealed drawings will govern.

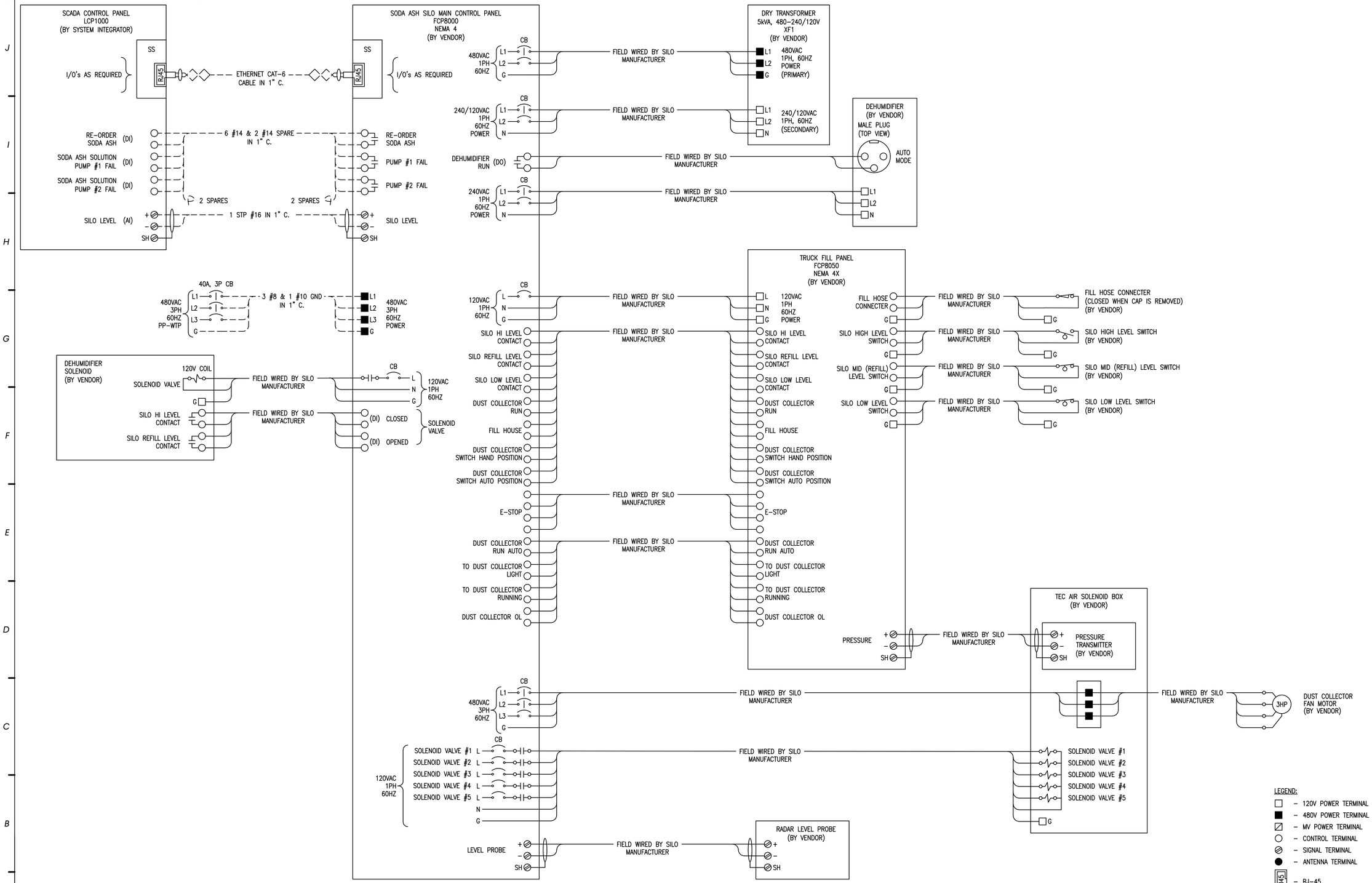

1 SODA ASH SILO MAIN – SHEMATIC WIRING DIAGRAM

EDEC, INC.
4120 CHATTAHOOCHEE TRACE
SUITE A
DULUTH, GEORGIA 30097
TEL. (770) 493-8685

GMC

2660 Eastchase Lane
Suite 200
Montgomery, AL 36117
T 334.271.3200

ISSUE	DATE
ISSUED FOR BID	03-15-25

DESIGNER: DV
DRAWN BY: DV

COUNTY RD 29 WATER TREATMENT PLANT
PRATTVILLE WATER WORKS
PRATTVILLE, AL

CMGM230095

ALABAMA LICENSED No. 30192 PROFESSIONAL ENGINEER ALEC ZAYCHIK

SODA ASH SILO MAIN - SHEMATIC WIRING DIAGRAM

E-612

This drawing is and shall remain the property of Goodwyn, Mills and Cawood, Inc. (GMC) and Goodwyn Mills Cawood LLC (GMC). Unauthorized use of any kind including use on other projects is prohibited. In the event that a conflict arises between the sealed drawings and the electronic files, the sealed drawings will govern.

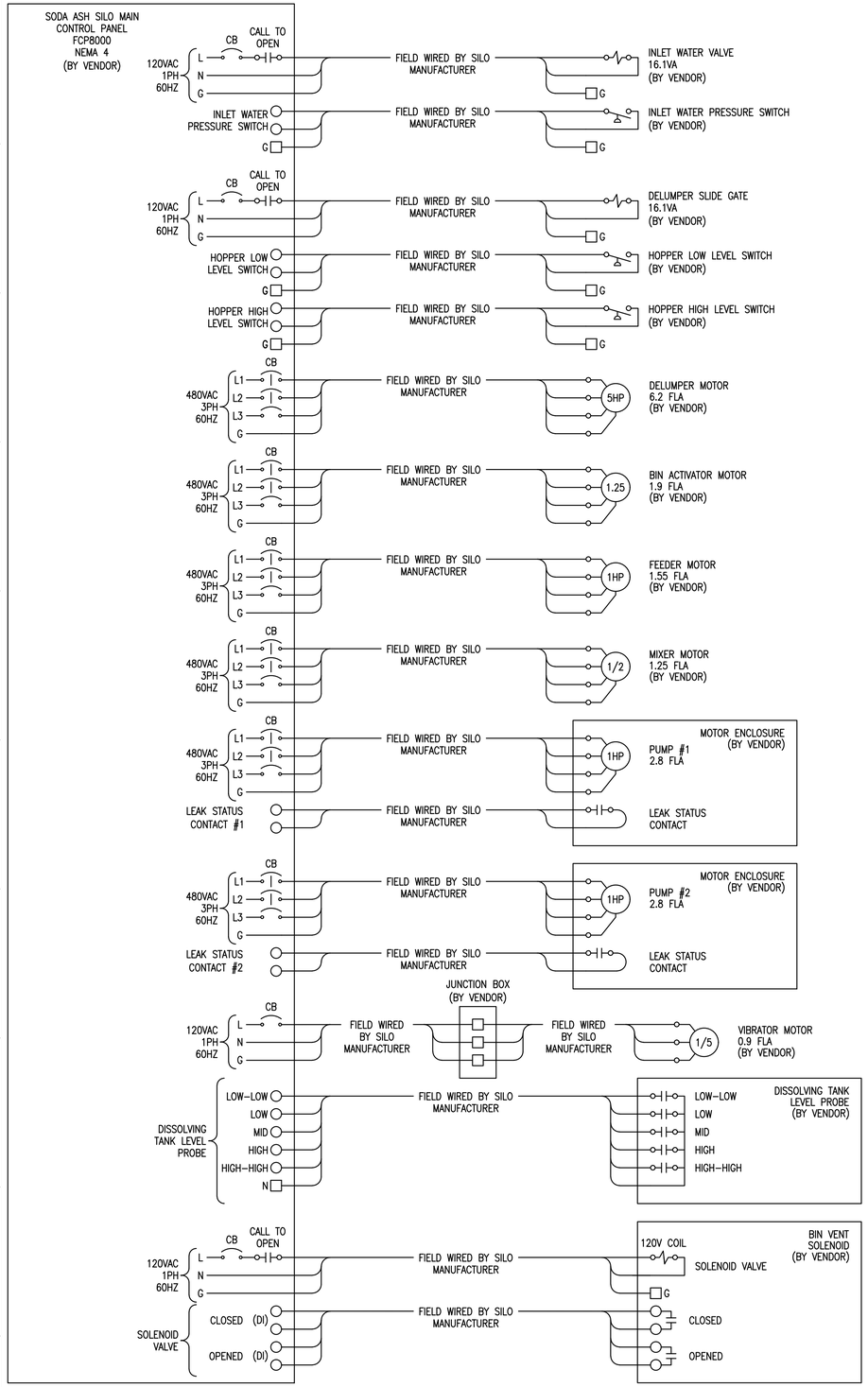

1 SODA ASH SILO MAIN CONTROL PANEL – SHEMATIC WIRING DIAGRAM

LEGEND:

- □ – 120V POWER TERMINAL
- ■ – 480V POWER TERMINAL
- ▨ – MV POWER TERMINAL
- ○ – CONTROL TERMINAL
- ⊘ – SIGNAL TERMINAL
- ● – ANTENNA TERMINAL
- RJ45 – RJ-45
- TX/RX – FIBER OPTIC PORT

EDEC, INC.
4120 CHATTAHOOCHEE TRACE
SUITE A
DULUTH, GEORGIA 30097
TEL. (770) 493-8685

GMC

2660 Eastchase Lane
Suite 200
Montgomery, AL 36117
T 334.271.3200

ISSUE	DATE
ISSUED FOR BID	03-15-25

DESIGNER: DV
DRAWN BY: DV

COUNTY RD 29 WATER TREATMENT PLANT
PRATTVILLE WATER WORKS
PRATTVILLE, AL

CMGM230095

ALABAMA LICENSED No. 30182 PROFESSIONAL ENGINEER ALEC ZAYCHIK

SODA ASH SILO MAIN - SHEMATIC WIRING DIAGRAM

E-613

This drawing is and shall remain the property of Goodwyn, Mills and Cawood, Inc. (GMC) and Goodwyn Mills Cawood LLC (GMC). Unauthorized use of any kind including use on other projects is prohibited. In the event that a conflict arises between the sealed drawings and the electronic files, the sealed drawings will govern.

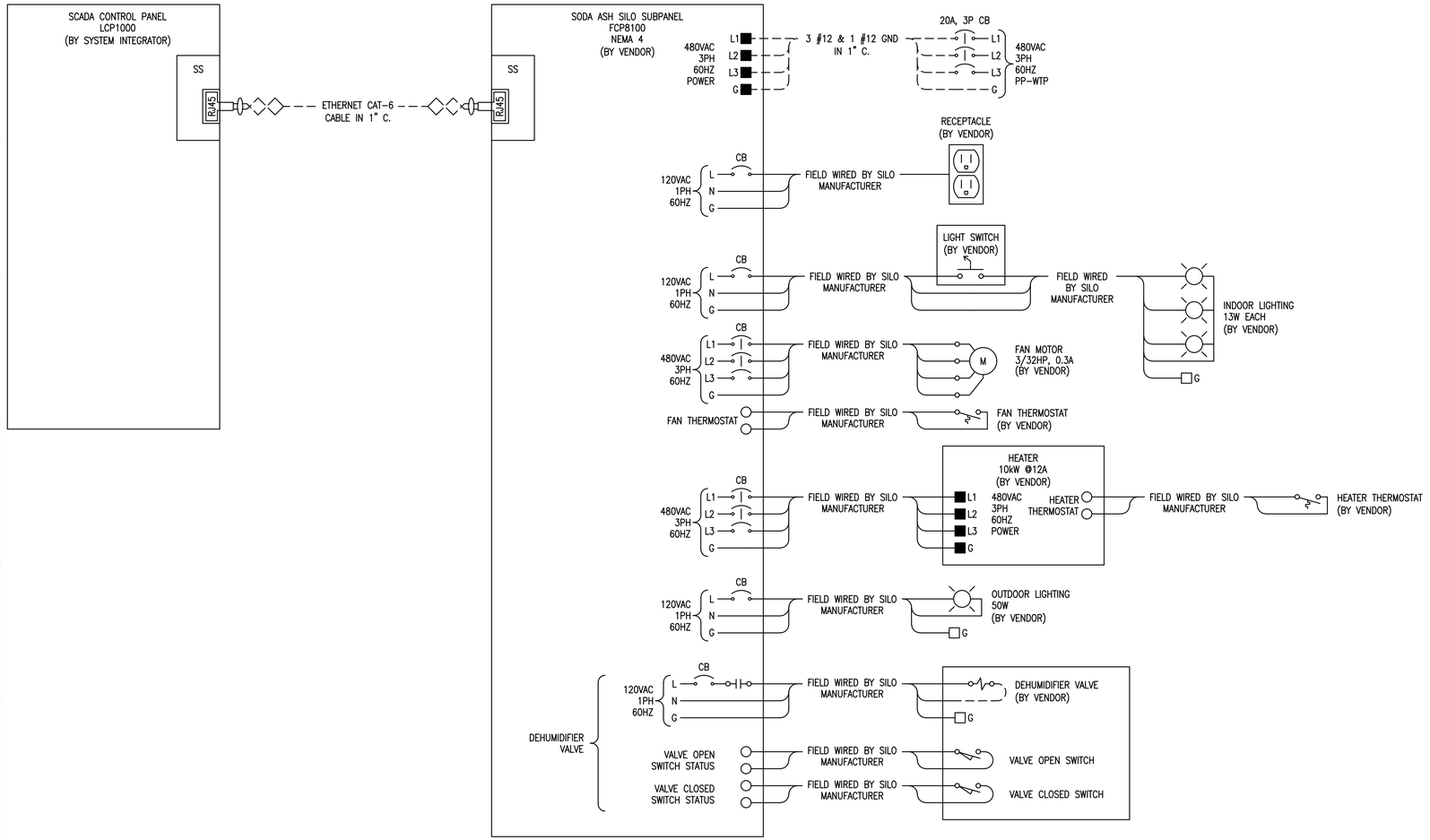

1 SODA ASH SILO SUBPANEL – SHEMATIC WIRING DIAGRAM

LEGEND:

- □ – 120V POWER TERMINAL
- ■ – 480V POWER TERMINAL
- ▨ – MV POWER TERMINAL
- ○ – CONTROL TERMINAL
- ⊘ – SIGNAL TERMINAL
- ● – ANTENNA TERMINAL
- RJ45 – RJ-45
- TX/RX – FIBER OPTIC PORT

EDEC, INC.
4120 CHATTAHOOCHEE TRACE
SUITE A
DULUTH, GEORGIA 30097
TEL. (770) 493-8685

GMC

2660 Eastchase Lane
Suite 200
Montgomery, AL 36117
T 334.271.3200

1" 5" 0" 1"

ISSUE	DATE
ISSUED FOR BID	03-15-25

DESIGNER: DV
DRAWN BY: DV

COUNTY RD 29 WATER TREATMENT PLANT
PRATTVILLE WATER WORKS
PRATTVILLE, AL

CMGM230095

ALABAMA LICENSED No. 30182 PROFESSIONAL ENGINEER ALEC ZAYCHIK

SODA ASH SILO SUBPANEL - SHEMATIC WIRING DIAGRAM

E-614

This drawing is and shall remain the property of Goodwyn, Mills and Cawood, Inc. (GMC) and Goodwyn Mills Cawood LLC (GMC). Unauthorized use of any kind including use on other projects is prohibited. In the event that a conflict arises between the sealed drawings and the electronic files, the sealed drawings will govern.

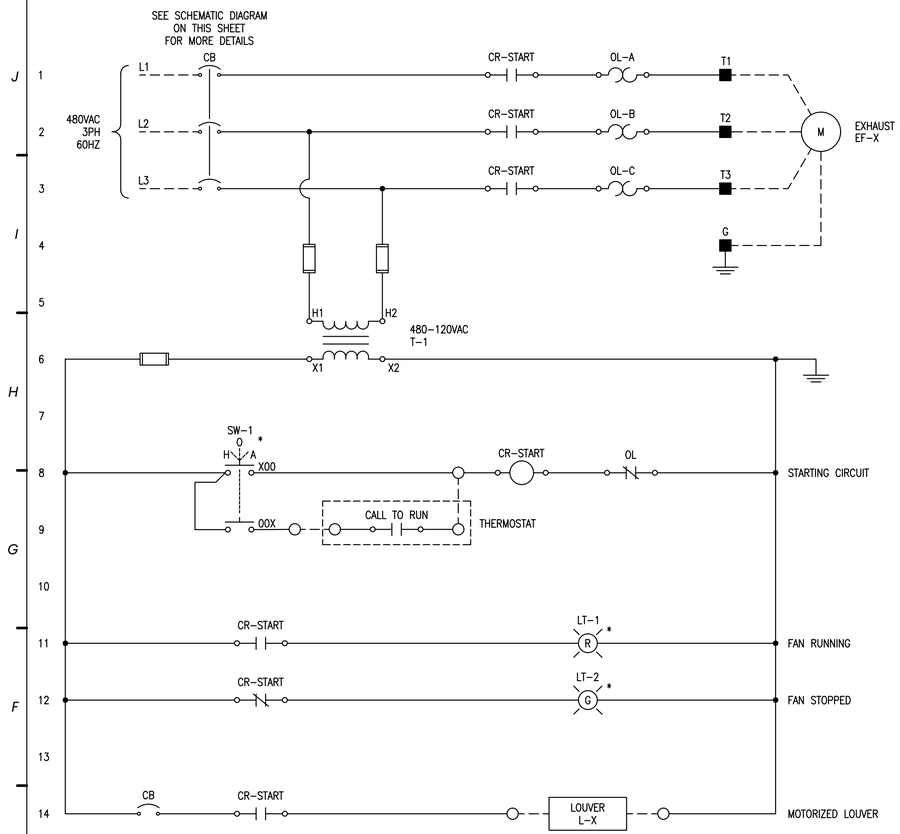

1 EXHAUST FAN MOTOR STARTER – ELEMENTARY DIAGRAM

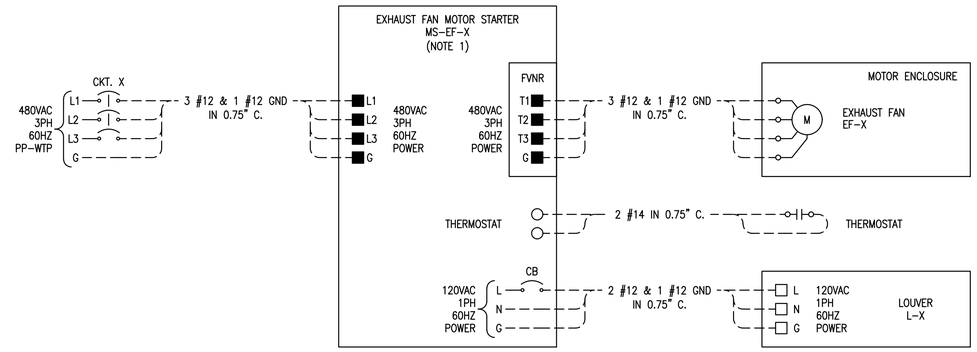

#	EXHAUST FAN	MOTOR STARTER	LOUVER	POWER	ENCLOSURE TYPE	LOCATION
1	EF-1	MS-EF-1	L-1	PP-WTP CKT. 20, 22, 24	NEMA 4	HIGH SERVICE PUMP ROOM
2	EF-3	MS-EF-3	L-3	PP-WTP CKT. 25, 27, 29	NEMA 4X SS	HIGH SERVICE PUMP ROOM

2 EXHAUST FAN MOTOR STARTER – SCHEMATIC WIRING DIAGRAM

NOTE:

1. THE CONTRACTOR SHALL PROVIDE AND INSTALL EXHAUST FAN ENCLOSED MOTOR STARTER WHICH INCLUDES ALL NECESSARY POWER AND CONTROLS COMPONENTS INCLUDING, BUT NOT LIMITED TO THE FOLLOWING:
   - A. CABINET SCCR SHALL BE 25kAIC MINIMUM.
   - B. ENCLOSURE: WALL MOUNTED NEMA AS SHOWN.
   - C. FULL VOLTAGE NON-REVERSING (FVNR) NEMA TYPE COMBINATION MOTOR STARTER WITH MOTOR CIRCUIT PROTECTORS (WITH EXTERNAL OPERATOR), RATED FOR MOTOR HP.
   - D. 0.2kVA, 480-120V CONTROL POWER TRANSFORMER WITH PRIMARY AND SECONDARY CIRCUIT BREAKERS.
   - E. SELECTOR SWITCHES:
     - E.1. H-O-A SWITCH.
   - F. INDICATING LIGHTS FOR:
     - F.1. RUNNING (RED);
     - F.2. STOPPED (GREED);
     - F.3. OVERLOAD FAULT (AMBER).
   - G. MEANS OF I/O'S COMMUNICATION:
     - G.1. 120V, 5A RATED DRY CONTACTS, PREWIRED TO FIELD TERMINALS:
       - G.1.1. RUNNING;
       - G.1.2. OVERLOAD FAULT;
       - G.1.3. AUTO MODE.
   - H. CABINET SHALL INCLUDE ALL NECESSARY COMPONENTS FOR EQUIPMENT SAFE AND RELIABLE OPERATION.

   THE CABINET SHALL BE MANUFACTURED BY EATON, SCHNEIDER ELECTRIC, ALLEN-BRADLEY, ABB, SIEMENS OR APPROVED EQUAL MANUFACTURER, THE CABINET SHALL BE UL LISTED AND LABELED. CONTRACTOR SHALL SUBMIT DETAILED WIRING DIAGRAM AND BOM FOR THE CONTROL PANEL TO ENGINEER FOR APPROVAL, PRIOR TO FABRICATION.

LEGEND:

- □ – 120V POWER TERMINAL
- ■ – 480V POWER TERMINAL
- ▨ – MV POWER TERMINAL
- ○ – CONTROL TERMINAL
- ⊘ – SIGNAL TERMINAL
- ● – ANTENNA TERMINAL
- RJ45 – RJ-45
- TX / RX – FIBER OPTIC PORT
- * – DOOR MOUNTED

EDEC, INC.
4120 CHATTAHOOCHEE TRACE
SUITE A
DULUTH, GEORGIA 30097
TEL. (770) 493-8685

GMC

2660 Eastchase Lane
Suite 200
Montgomery, AL 36117
T 334.271.3200

ISSUE	DATE
ISSUED FOR BID	03-15-25

DESIGNER: DV
DRAWN BY: DV

COUNTY RD 29 WATER TREATMENT PLANT
PRATTVILLE WATER WORKS
PRATTVILLE, AL

CMGM230095

ALABAMA LICENSED No. 30192 PROFESSIONAL ENGINEER ALEC ZAYCHIK

EXHAUST FAN - SHEMATIC WIRING DIAGRAM

E-615

This drawing is and shall remain the property of Goodwyn, Mills and Cawood, Inc. (GMC) and Goodwyn Mills Cawood LLC (GMC). Unauthorized use of any kind including use on other projects is prohibited. In the event that a conflict arises between the sealed drawings and the electronic files, the sealed drawings will govern.

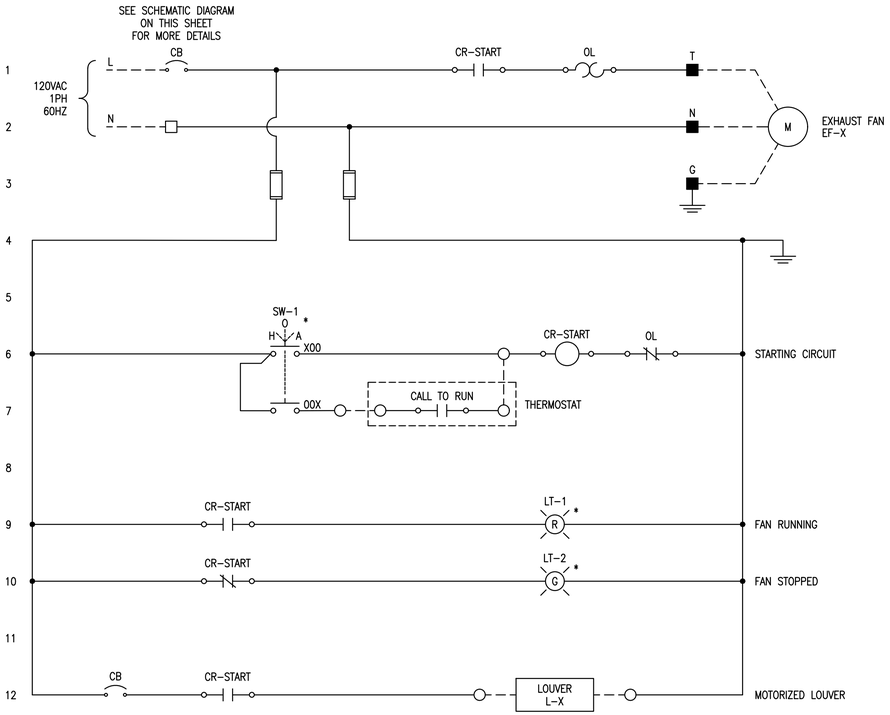

1 EXHAUST FAN MOTOR STARTER – ELEMENTARY DIAGRAM

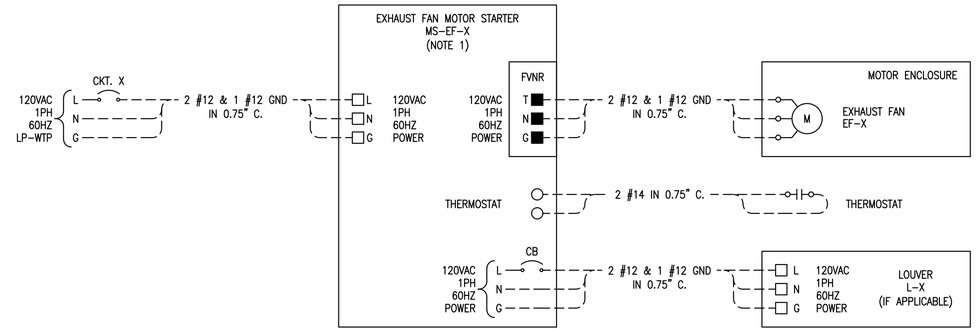

#	EXHAUST FAN	MOTOR STARTER	LOUVER	POWER	ENCLOSURE TYPE	LOCATION
1	EF-2	MS-EF-3	L-2	CKT. 41	NEMA 4X SS	CHLORINE ROOM

2 EXHAUST FAN MOTOR STARTER – SCHEMATIC WIRING DIAGRAM

NOTES:

1. THE CONTRACTOR SHALL PROVIDE AND INSTALL EXHAUST FAN ENCLOSED MOTOR STARTER WHICH INCLUDES ALL NECESSARY POWER AND CONTROLS COMPONENTS INCLUDING, BUT NOT LIMITED TO THE FOLLOWING:
   - A. CABINET SCCR SHALL BE 25kAIC MINIMUM.
   - B. ENCLOSURE: WALL MOUNTED NEMA AS SHOWN.
   - C. FULL VOLTAGE NON-REVERSING (FVNR) IEC TYPE COMBINATION MOTOR STARTER WITH MOTOR CIRCUIT PROTECTORS (WITH EXTERNAL OPERATOR), RATED FOR MOTOR HP.
   - D. SELECTOR SWITCHES:
     - D.1. H-O-A SWITCH.
   - E. INDICATING LIGHTS FOR:
     - E.1. RUNNING (RED);
     - E.2. STOPPED (GREED);
     - E.3. OVERLOAD FAULT (AMBER).
   - F. MEANS OF I/O'S COMMUNICATION:
     - F.1. 120V, 5A RATED DRY CONTACTS, PREWIRED TO FIELD TERMINALS:
       - F.1.1. RUNNING;
       - F.1.2. OVERLOAD FAULT;
       - F.1.3. AUTO MODE.
   - G. CABINET SHALL INCLUDE ALL NECESSARY COMPONENTS FOR EQUIPMENT SAFE AND RELIABLE OPERATION.

THE CABINET SHALL BE MANUFACTURED BY EATON, SCHNEIDER ELECTRIC, ALLEN-BRADLEY, ABB, SIEMENS OR APPROVED EQUAL MANUFACTURER, THE CABINET SHALL BE UL LISTED AND LABELED. CONTRACTOR SHALL SUBMIT DETAILED WIRING DIAGRAM AND BOM FOR THE CONTROL PANEL TO ENGINEER FOR APPROVAL, PRIOR TO FABRICATION.

LEGEND:

- □ – 120V POWER TERMINAL
- ■ – 480V POWER TERMINAL
- ◪ – MV POWER TERMINAL
- ○ – CONTROL TERMINAL
- ⊘ – SIGNAL TERMINAL
- ● – ANTENNA TERMINAL
- RJ45 – RJ-45
- TX RX – FIBER OPTIC PORT
- * – DOOR MOUNTED

EDEC, INC.
4120 CHATTAHOOCHEE TRACE
SUITE A
DULUTH, GEORGIA 30097
TEL. (770) 493-8685

GMC

2660 Eastchase Lane
Suite 200
Montgomery, AL 36117
T 334.271.3200

1" 5" 0" 1"

ISSUE	DATE
ISSUED FOR BID	03-15-25

DESIGNER: DV
DRAWN BY: DV

COUNTY RD 29 WATER TREATMENT PLANT
PRATTVILLE WATER WORKS
PRATTVILLE, AL

CMGM230095

ALABAMA LICENSED No. 30182 PROFESSIONAL ENGINEER ALEC ZAYCHIK

EXHAUST FAN - SHEMATIC WIRING DIAGRAM

E-616

This drawing is and shall remain the property of Goodwyn, Mills and Cawood, Inc. (GMC) and Goodwyn Mills Cawood LLC (GMC). Unauthorized use of any kind including use on other projects is prohibited. In the event that a conflict arises between the sealed drawings and the electronic files, the sealed drawings will govern.

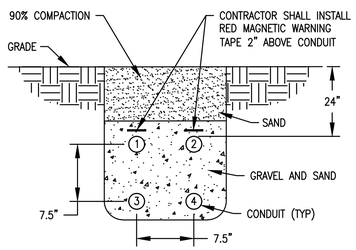

NOTES:

1. NUMBER AND SIZE OF EECTRICAL CONDUITS SHALL BE AS INDICATED ON THE DESIGN DRAWINGS.
2. BOND THE GROUNDING CONDUCTOR TO ALL GROUNDING ELECTRODES ALONG THE DUCTBANK ROUTE, INCLUDING THE BUILDING'S GROUNDING ELECTRODE AT BOTH ENDS OF THE DUCTBANK.
5. INSTALL SADDLE-TYPE CONDUIT SPACERS AT INTERVALS OF 8 FEET OR AS OTHERWISE SPECIFIED BY THE MANUFACTURER's RECOMMENDATIONS.

A CONDUIT SECTION IN TRENCH

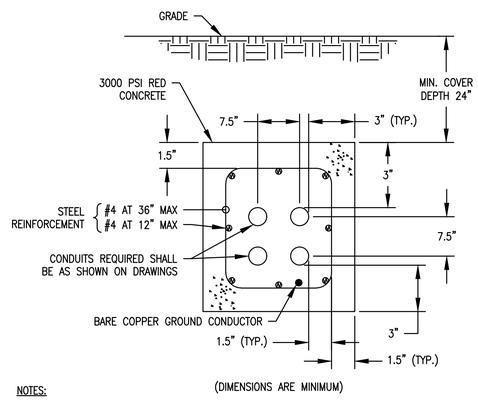

NOTES:

1. ALL DUCTBANKS CROSSING ROADS OR HEAVY TRAFFIC AREAS SHALL BE REINFORCED WITHIN FIVE (5) FEET OF TRAFFIC AREAS.
2. CONTRACTOR SHALL FIELD COORDINATE EXACT DUCTBANK ROUTING WITH EXISTING UTILITIES.
3. NUMBER AND SIZE OF EECTRICAL CONDUITS SHALL BE AS INDICATED ON THE DESIGN DRAWINGS.
4. BOND THE GROUNDING CONDUCTOR TO ALL GROUNDING ELECTRODES ALONG THE DUCTBANK ROUTE, INCLUDING THE BUILDING'S GROUNDING ELECTRODE AT BOTH ENDS OF THE DUCTBANK.
5. INSTALL SADDLE-TYPE CONDUIT SPACERS AT INTERVALS OF 8 FEET OR AS OTHERWISE SPECIFIED BY THE MANUFACTURER's RECOMMENDATIONS.

B REINFORCED DUCT BACK

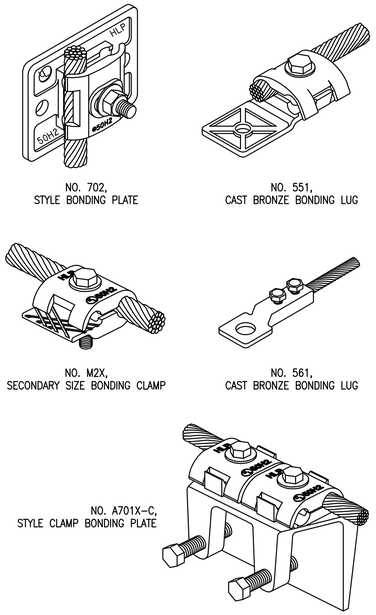

C BONDING LUGS AND PLATES

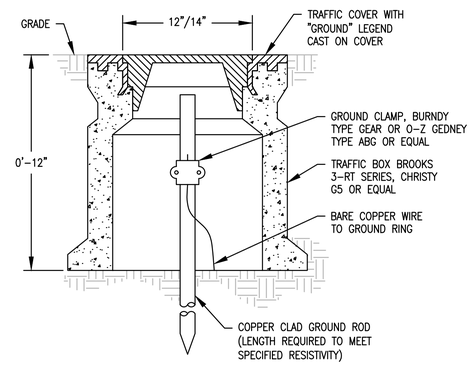

D GROUND TEST WELL

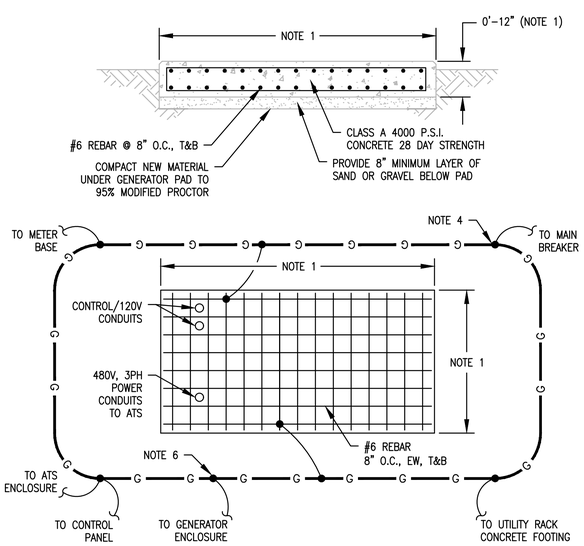

NOTES:

1. REVIEW DIMENSIONS OF GEN. SET, INCLUDING W.P. HOUSING, TO DETERMINE ACTUAL DIMENSIONS OF GEN. PAD. PAD SHALL BE INSTALLED AS RECOMMENDED BY THE GENERATOR MANUFACTURER.
2. PAD SHALL BE 12" LARGER ON ALL SIDES THAN THE GENERATOR BASE AND ENCLOSURE.
3. VERIFY CONDUIT PENETRATIONS WITH GENERATOR MANUFACTURER.
4. PROVIDE 10' x 3/8" COPPER CLAD STEEL GROUND RODS AS SHOWN WITH BARE COPPER GROUND WIRE AROUND THE GENERATOR PAD. CONNECT GROUND WIRE TO THE GENERATOR ENCLOSURE.
5. EXACT GENERATOR PAD SIZE SHALL BE DETERMINED BY THE GENERATOR MANUFACTURER's SHOP DRAWING PRIOR TO INSTALLATION.
6. GENERATOR HOUSING SHALL BE GROUNDED, NOT THE NEUTRAL.

E GENERATOR GROUNDING

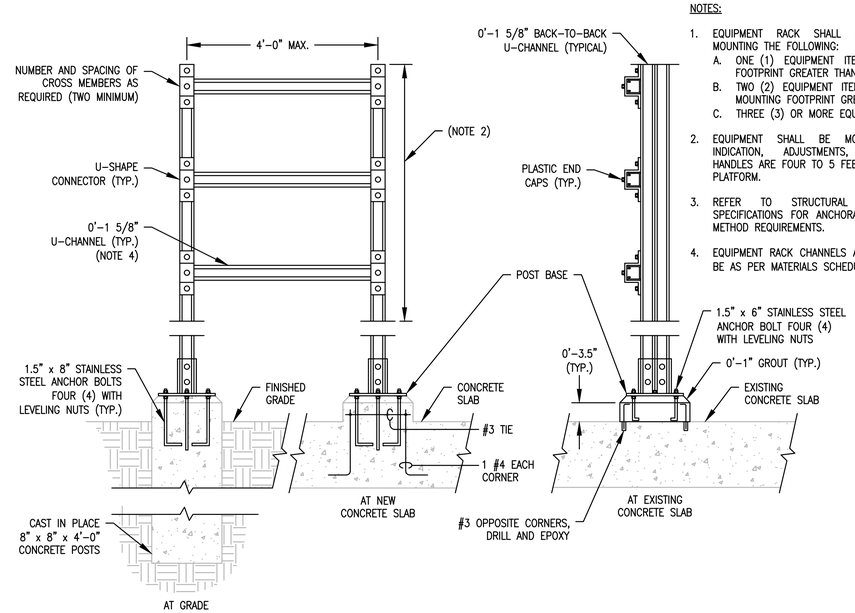

NOTES:

1. EQUIPMENT RACK SHALL BE UTILIZED FOR MOUNTING THE FOLLOWING:
   A. ONE (1) EQUIPMENT ITEM WITH MOUNTING FOOTPRINT GREATER THAN 150 IN,
   B. TWO (2) EQUIPMENT ITEMS WITH COMBINED MOUNTING FOOTPRINT GREATER THAN 130 IN,
   C. THREE (3) OR MORE EQUIPMENT ITEMS.
2. EQUIPMENT SHALL BE MOUNTED SO THAT INDICATION, ADJUSTMENTS, OR OPERATING HANDLES ARE FOUR TO 5 FEET ABOVE FLOOR OR PLATFORM.
3. REFER TO STRUCTURAL DRAWINGS AND SPECIFICATIONS FOR ANCHORAGE MATERIALS AND METHOD REQUIREMENTS.
4. EQUIPMENT RACK CHANNELS AND FITTINGS SHALL BE AS PER MATERIALS SCHEDULE (E-002).

F EQUIPMENT RACK

EDEC, INC.
4120 CHATTAHOOCHEE TRACE
SUITE A
DULUTH, GEORGIA 30097
TEL. (770) 493-8685

GMC

2660 Eastchase Lane
Suite 200
Montgomery, AL 36117
T 334.271.3200

ISSUE	DATE
ISSUED FOR BID	03-15-25

DESIGNER: DV
DRAWN BY: DV

COUNTY RD 29 WATER TREATMENT PLANT
PRATTVILLE WATER WORKS
PRATTVILLE, AL

CMGM230095

ALABAMA LICENSED No. 30182 PROFESSIONAL ENGINEER ALEC ZAYCHIK

ELECTRICAL INSTALLATION DETAILS

E-901

This drawing is and shall remain the property of Goodwyn, Mills and Cawood, Inc. (GMC) and Goodwyn Mills Cawood LLC (GMC). Unauthorized use of any kind including use on other projects is prohibited. In the event that a conflict arises between the sealed drawings and the electronic files, the sealed drawings will govern.

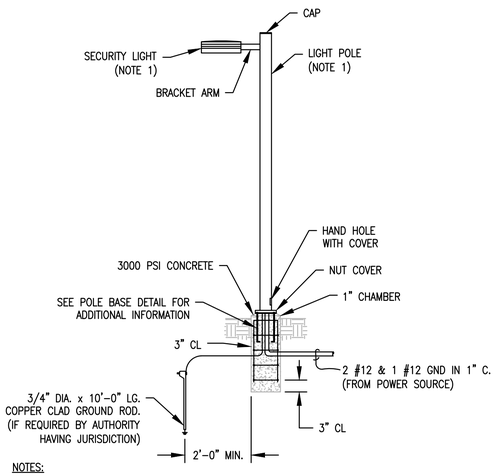

NOTES:

1. REFER TO THE LIGHTING FIXTURES AND POLES SCHEDULE FOR DETAILS.
2. WIRING TO BE CONTINUOUS TO FIXTURE. NO SPLICING IN CONDUIT IS PERMITTED.

A LIGHT POLE

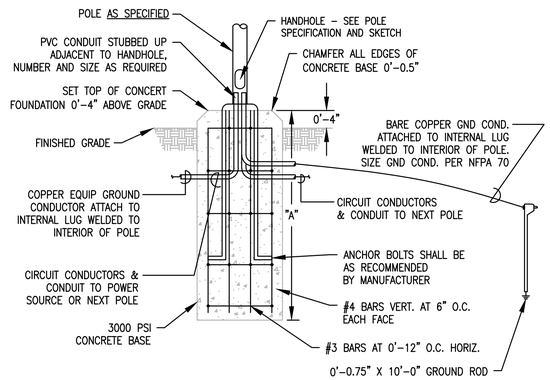

POLE HEIGHT	A	B
8' –12'	3'–0"	1'–0"
13' – 20'	4'–6"	1'–6"
21' – 25'	6'–0"	2'–0"

B LIGHTING POLE BASE

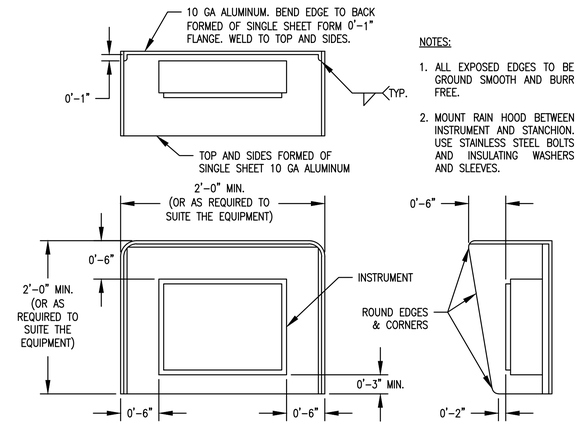

NOTES:

1. ALL EXPOSED EDGES TO BE GROUND SMOOTH AND BURR FREE.
2. MOUNT RAIN HOOD BETWEEN INSTRUMENT AND STANCHION. USE STAINLESS STEEL BOLTS AND INSULATING WASHERS AND SLEEVES.

C SUN/RAIN HOOD
FOR INSTRUMENTS AND CONTROL PANELS

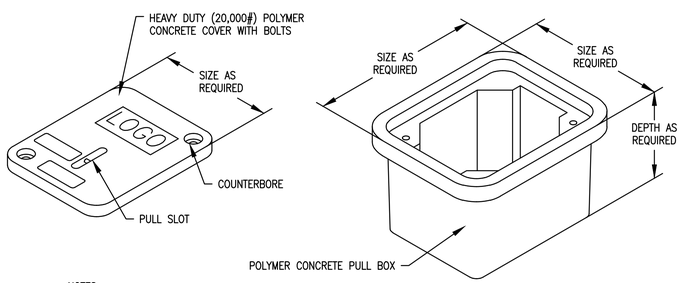

NOTES:

1. PULL BOX TO BE MADE WITH PRECAST POLYMER CONCRETE FIBERGLASS REINFORCED, STACKABLE WITH SELF-ALIGNING, REPLACEABLE EZ-NUT.
2. THE CONTRACTOR SHALL SIZE THE PULLBOXES BASED ON THE NUMBER OF CONDUITS. USE MANHOLES WHERE PULLBOX WIDTH/HEIGHT IS NOT SUFFICIENT TO ACCEPT ALL ENTERING/EXITING CONDUITS.
3. "LOGO" ENGRAVING SHALL READ "ELECTRICAL" FOR ALL ELECTRICAL/FIBER UNDERGROUND DUCTBANKS.

TIER TYPE	APPLICATION DESCRIPTION	NOTES
8	SIDEWALK APPLICATIONS, NOT EXPOSED TO ANY VEHICLE TRAFFIC	
15	OFF-ROADWAY APPLICATIONS SUBJECT TO OCCASIONAL NON-DELIBERATE VEHICLE TRAFFIC	
22	DRIVEWAY AND PARKING LOT APPLICATIONS SUBJECT TO OCCASIONAL NON-DELIBERATE HEAVY VEHICULAR TRAFFIC	
AASHTO H-20	DRIVEWAY, PARKING LOT, AND OFF-ROADWAY APPLICATIONS SUBJECT TO HEAVY VEHICLE TRAFFIC	UTILIZE PRECAST HANDHOLES FOR AASHTO H-20 APPLICATIONS

D UNDERGROUND PULL BOX

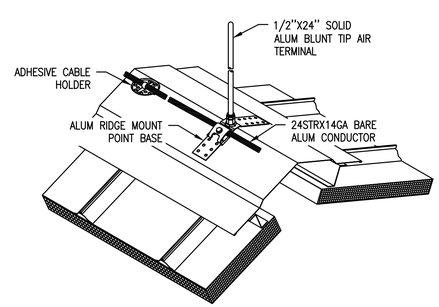

E ROOF AIR TERMINAL INSTALLATION DETAIL

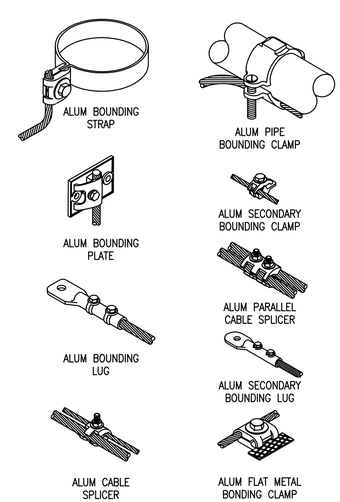

F BOUNDING & SPLICING DETAILS

EDEC, INC.
4120 CHATTAHOOCHEE TRACE
SUITE A
DULUTH, GEORGIA 30097
TEL. (770) 493-8685

GMC

2660 Eastchase Lane
Suite 200
Montgomery, AL 36117
T 334.271.3200

ISSUE	DATE
ISSUED FOR BID	03-15-25

DESIGNER: DV
DRAWN BY: DV

COUNTY RD 29 WATER TREATMENT PLANT
PRATTVILLE WATER WORKS
PRATTVILLE, AL

CMGM230095

ALABAMA LICENSED No. 30132 PROFESSIONAL ENGINEER ALEC ZAYCHIK

ELECTRICAL INSTALLATION DETAILS

E-902

This drawing is and shall remain the property of Goodwyn, Mills and Cawood, Inc. (GMC) and Goodwyn Mills Cawood LLC (GMC). Unauthorized use of any kind including use on other projects is prohibited. In the event that a conflict arises between the sealed drawings and the electronic files, the sealed drawings will govern.

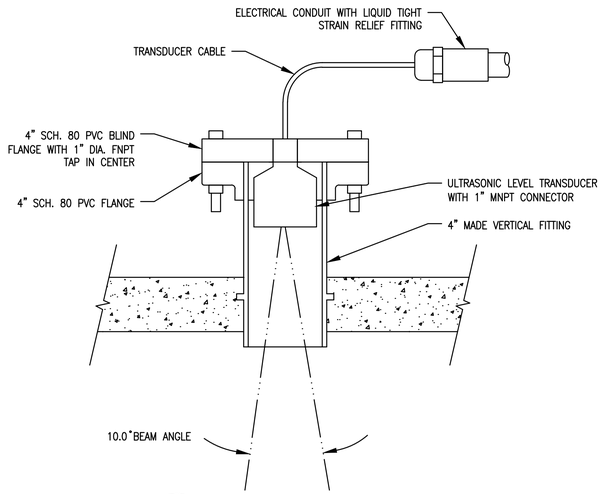

A ULTRASONIC LEVEL SENSOR

FLANGE MOUNTED IN CONCRETE SLAB

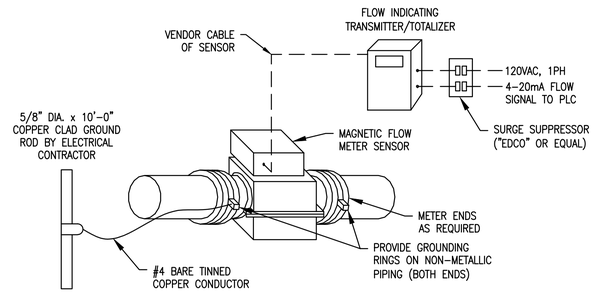

NOTES:

1. POWER SUPPLY TO MAGNETIC METER PRIMARY DEVICE & TRANSMITTER TO BE FROM SAME SOURCE WITH RESPECT TO VOLTAGE, FREQUENCY AND PHASE.

B ELECTROMAGNETIC FLOW METER

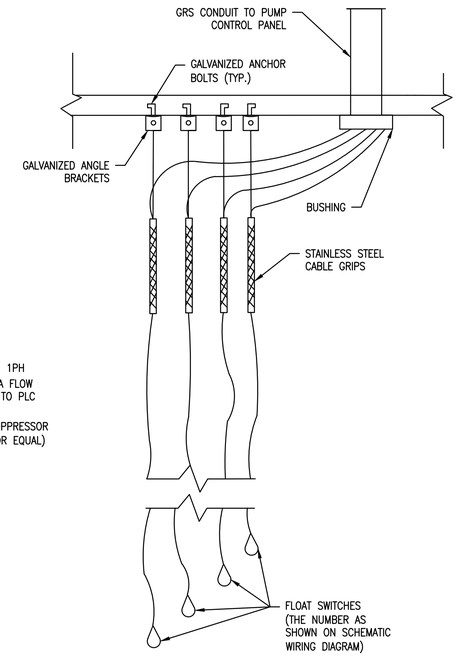

C FLOAT SWITCH SUSPENSION

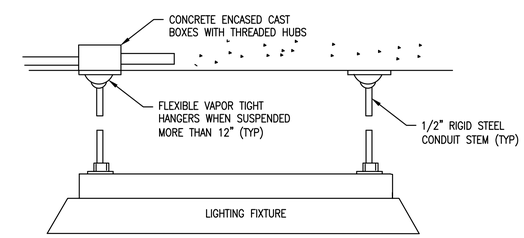

INSTALLATION FOR CONCEALED CONDUIT

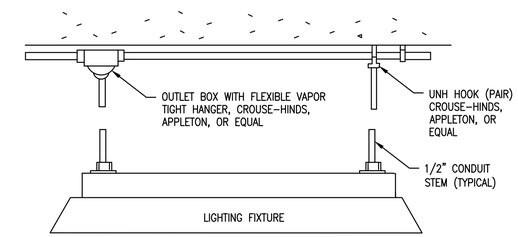

INSTALLATION FOR EXPOSED CONDUIT

D STRIP LIGHTS PENDANT MOUNTING DETAIL

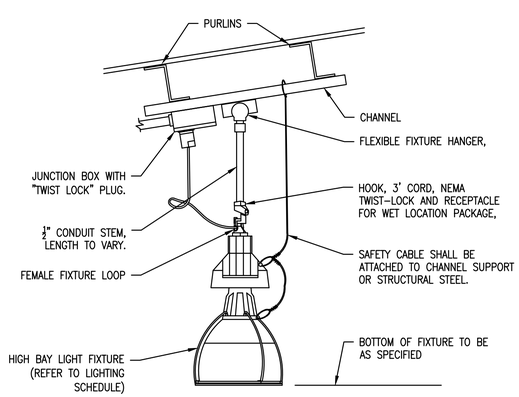

E HIGH BAY FIXTURE MOUNTING INSTALLATION DETAIL

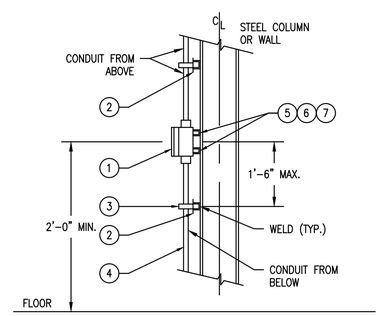

120V WATERTIGHT RECEPTACLE NOTE:

1. ALL FIELD WELDS TO BE 1/4" FILLET.

BILL OF MATERIAL			
ITEM	QTY	DESCRIPTION	REMARKS
1	1	20A, 120V, 3W, WEATHER–TIGHT DUPLEX RECEPTACLE, GROUNDING TYPE	
2	A/R	UNISTRUT P1000 (LENGTH A/R) OR EQUAL	
3	1	UNISTRUT CLAMP (3/4") OR EQUAL	
4	A/R	3/4" PVC COATED STEEL CONDUIT	
5	A/R	UNISTRUT P3300 (LENGTH A/R) OR EQUAL	
6	A/R	UNISTRUT SPRING NUTS	
7	A/R	BOLT & WASHER	

A/R=AS REQUIRED

F 120V WATERTIGHT RECEPTACLE INSTALLATION DETAIL

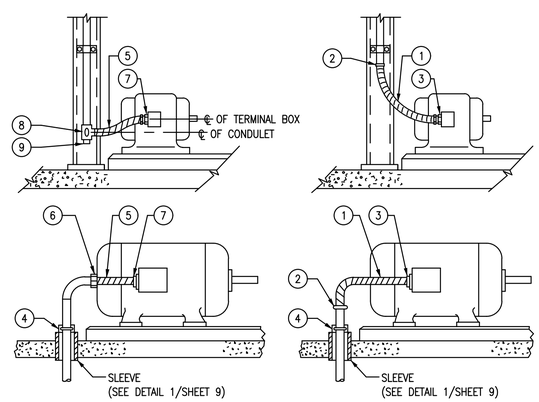

BILL OF MATERIAL			
ITEM	QTY	DESCRIPTION	REMARKS
1	A/R	METAL–CLAD CABLE (MC)	
2	A/R	INSULATING BUSHINGS	
3	A/R	WATERTIGHT MC CABLE TERMINATOR	
4	A/R	"U" CLAMP	
5	A/R	LIQUID–TIGHT FLEXIBLE METALLIC CONDUIT (6' MAX) (SUNLIGHT RESISTANT, PVC JACKETED)	
6	A/R	LIQUID–TIGHT COUPLING	
7	A/R	LIQUID–TIGHT CONNECTOR	
8	1	CONDUIT OUTLET BODY–"TEE"	
9	1	UNIVERSAL DRAIN/BREATHER	

A/R=AS REQUIRED

G ELECTRICAL MOTOR INSTALLATION

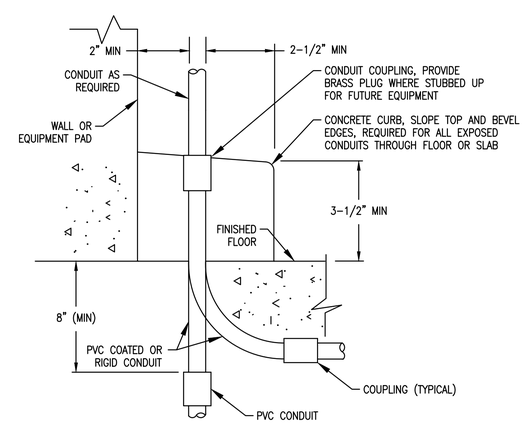

E CONDUIT CURB STUB–UP

EDEC, INC.
4120 CHATTAHOOCHEE TRACE
SUITE A
DULUTH, GEORGIA 30097
TEL. (770) 493-8685

GMC

2660 Eastchase Lane
Suite 200
Montgomery, AL 36117
T 334.271.3200

1" 5" 0" 1"

ISSUE	DATE
ISSUED FOR BID	03-15-25

DESIGNER: DV
DRAWN BY: DV

COUNTY RD 29 WATER TREATMENT PLANT
PRATTVILLE WATER WORKS
PRATTVILLE, AL

CMGM230095

ALABAMA LICENSED No. 30182 PROFESSIONAL ENGINEER ALEC ZAYCHIK

ELECTRICAL INSTALLATION DETAILS

E-903

This drawing is and shall remain the property of Goodwyn, Mills and Cawood, Inc. (GMC) and Goodwyn Mills Cawood LLC (GMC). Unauthorized use of any kind including use on other projects is prohibited. In the event that a conflict arises between the sealed drawings and the electronic files, the sealed drawings will govern.

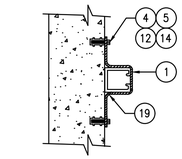

E.1 SUPPORT TO CONCRETE WALL

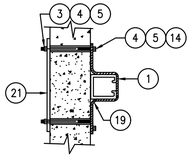

E.2 SUPPORT THRU BLOCK WALL

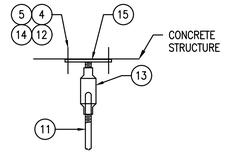

E.3 HANGING SUPPORT FROM CONCRETE CEILING

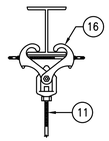

E.4 BEAM CLAMP

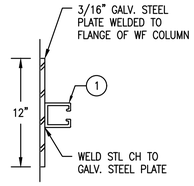

E.5 VERTICAL SUPPORT OFF COLUMN FLANGE

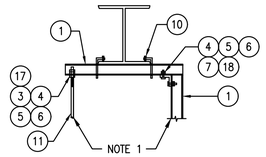

E.6 HANGING SUPPORT FROM BEAM

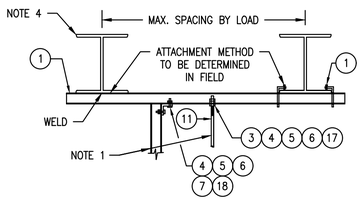

E.7 TRAPEZE SUPPORT FROM BEAMS

ELECTRICAL SUPPORT AND CONNECTION NOTES:

1. FIELD DETERMINE TYPE OF SUPPORT TO USE (THREADED RODS, OR METAL STRUT CHANNELS). MIXING PROHIBITED. RODS AND STRUT ARE SHOWN FOR INFORMATION PURPOSES ONLY.
2. ALL MOUNTING MATERIAL AND HARDWARE SHALL BE GALVANIZED STEEL, UNLESS OTHERWISE NOTED.
3. A MAXIMUM LOAD ON A THREADED STEEL ROD SHALL NOT EXCEED 1100 POUNDS FOR 1/2" ROD.
4. MEMBER SIZE AFFECTED BY WEIGHT AND SPAN

BILL OF MATERIAL

ITEM	QTY	DESCRIPTION	REMARKS
1	A/R	STRUT GALVANIZED STEEL CHANNEL 1-5/8" X 1-5/8"	
2	A/R	STRUT METAL FRAMING CHANNEL 1-5/8" X 3-1/4" (DOUBLE) IF REQ'D	
3	A/R	HEXAGON NUT	
4	A/R	FLAT WASHER OR CLEVIS WASHER	
5	A/R	LOCK WASHER	
6	A/R	SPRING NUT	
7	A/R	HEX HEAD CAP SCREW	
8	A/R	TRAY HOLD DOWN CLIP	
9	A/R	VERTICAL TRAY HANGER	
10	A/R	"U" BOLT BEAM CLAMP (ONE FOR EACH SIDE)	
11	A/R	THREADED ROD (SIZED TO SUIT CONDITIONS)	
12	A/R	CONCRETE INSERT (SIZED TO SUIT APPLICATION)	
13	A/R	THREADED ROD COUPLING	
14	A/R	GALVANIZED MACHINE BOLTS (LENGTH TO SUIT)	
15	A/R	NELSON TYPE STUD (SIZED TO SUIT)	
16	A/R	BEAM CLAMP	
17	A/R	FLANGE	
18	A/R	PLATE FITTING 90°	
19	A/R	U SHAPED STRUT FITTING	
20	A/R	SUPPORT ANGLE	
21	A/R	GALVANIZED FLAT STEEL PLATE-1/4" TH x 3" WIDE x LENGTH TO SUIT WITH TWO 9/16" DIA. HOLES	
22	A/R	ONE HOLE FLAT PLATE FITTING - FOR STRUT CHANNEL	

A/R=AS REQUIRED

A ELECTRICAL SUPPORT AND CONNECTION INSTALLATION DETAILS

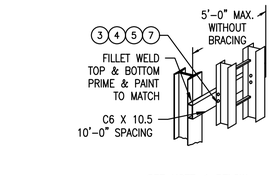

SEE NOTE-1 BELOW

1 VERTICAL TRAY SUPPORT OFF COLUMN

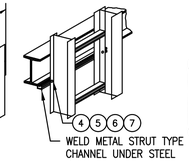

SEE NOTE-1 BELOW

2 VERTICAL TRAY SUPPORT OFF BEAM

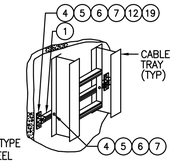

SEE NOTE-1 BELOW

3 VERTICAL TRAY SUPPORT OFF WALL

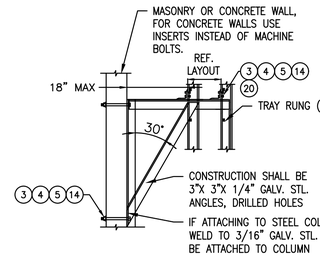

SEE NOTE-1 BELOW

4 VERTICAL TRAY SUPPORT PERPENDICULAR TO WALL

C-CHANNEL CABLE TRAY IS PERMITTED IF IT PROVIDES ADEQUATE CABLE SUPPORT BASED ON ACTUAL CABLE LOADS.

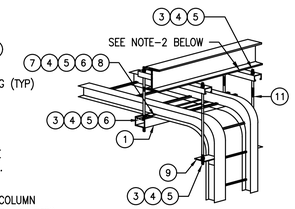

5 VERTICAL TRAY SUPPORT AT VERTICAL BEND

NOTES:

1. WHERE TRAY PENETRATES A FLOOR LEVEL A TRAY COVER SHALL BE INSTALLED TO A HEIGHT OF 6'-0" ABOVE THE FLOOR. INSTALL A COVER ON THE REAR ALSO IF ACCESSIBLE.
2. METAL STRUT CHANNELS OR STRUCTURAL STEEL MEMBERS MAY BE USED TO CONNECT TO BEAM, EITHER MAY BE CONNECTED TO THE BEAM BY WELDING OR AS NOTED ON THE SUPPORT AND CONNECTION DETAILS 1 THRU 7 ON SHEET 17.
3. FOR APPROPRIATE SUPPORT AND HARDWARE SEE DETAILS 1 THRU 7 ON SHEET 17 (SUPPORT AND CONNECTION DETAILS).
4. AFTER WELDING - CONTRACTOR SHALL PAINT ALL WELDS & GROUND OFF GALVANIZING WITH A ZINC RICH CHROMATE OR COLD GALVANIZING TYPE PAINT.

B ELECTRICAL SUPPORT AND CONNECTION DETAILS 2

BILL OF MATERIAL

ITEM	QTY	DESCRIPTION	REMARKS
1	A/R	STRUT GALVANIZED STEEL CHANNEL 1-5/8" X 1-5/8"	
2	A/R	STRUT METAL FRAMING CHANNEL 1-5/8" X 3-1/4" (DOUBLE) IF REQ'D	
3	A/R	HEXAGON NUT	
4	A/R	FLAT WASHER OR CLEVIS WASHER	
5	A/R	LOCK WASHER	
6	A/R	SPRING NUT	
7	A/R	HEX HEAD CAP SCREW	
8	A/R	TRAY HOLD DOWN CLIP	
9	A/R	VERTICAL TRAY HANGER	
10	A/R	"U" BOLT BEAM CLAMP (ONE FOR EACH SIDE)	
11	A/R	THREADED ROD (SIZED TO SUIT CONDITIONS)	
12	A/R	CONCRETE INSERT (SIZED TO SUIT APPLICATION)	
13	A/R	THREADED ROD COUPLING	
14	A/R	GALVANIZED MACHINE BOLTS (LENGTH TO SUIT)	
15	A/R	NELSON TYPE STUD (SIZED TO SUIT)	
16	A/R	BEAM CLAMP	
17	A/R	FLANGE	
18	A/R	PLATE FITTING 90°	
19	A/R	U SHAPED STRUT FITTING	
20	A/R	SUPPORT ANGLE	
21	A/R	GLAVANIZED FLAT STEEL PLATE-1/4" TH x 3" WIDE x LENGTH TO SUIT WITH TWO 9/16" DIA. HOLES	
22	A/R	ONE HOLE FLAT PLATE FITTING - FOR STRUT CHANNEL	

A/R=AS REQUIRED

ELECTRICAL SUPPORT AND CONNECTION DETAILS 2

BILL OF MATERIALS

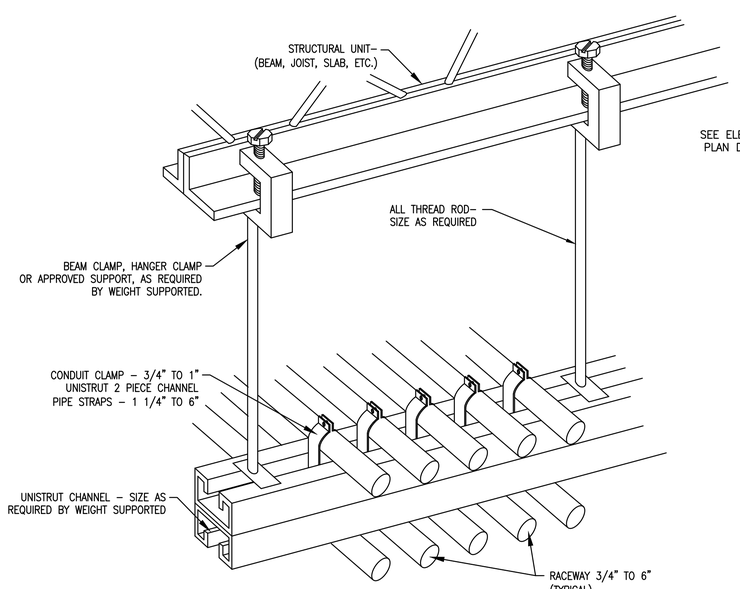

C TYPICAL CONDUIT RACK

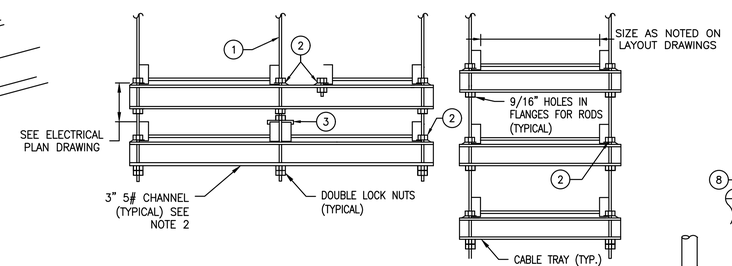

NOTES:

1. THE LENGTH OF THE SPAN IS TO BE DETERMINED BY THE LOADING OF THE TRAYS, WHICH SHALL BE ASSUMED TO BE 100 POUNDS PER FOOT MINIMUM EACH, EXCEPT AS OTHERWISE APPROVED. THE MAXIMUM SPAN SHALL NOT EXCEED 12 FEET WITH MINIMUM LOADING AND IN NO CASE SHALL A ROD BE LOADED TO MORE THAN MAXIMUM ROD ALLOWABLE LOAD.
2. WHEN APPROVED, GALVANIZED DOUBLE STRUT MAY BE USED IN LIEU OF 3" CHANNEL.
3. UNLESS OTHERWISE NOTED ON THE DRAWINGS HARDWARE SHALL BE GALVANIZED OR CADMIUM PLATED. LOCKNUTS OR LOCKWASHERS SHALL BE USED WHERE-EVER NEEDED TO PREVENT POSSIBLE LOOSENING AND LOSS OF SUPPORT.
4. ELEVATION OF CABLE TRAYS ON LAYOUT DRAWING SHALL BE TO BOTTOM FLANGE OF THE SIDE STRINGER.
5. TRAPEZE SUPPORTS FOR CONDUIT SHALL BE SIMILAR IN CONSTRUCTION TO THOSE SHOWN ABOVE.

BILL OF MATERIAL

ITEM	QTY	DESCRIPTION	REMARKS
1	A/R	1/2" DIA. GALVANIZED THREADED HANGER ROD	
2	A/R	SINGLE HOLD DOWN CLIP	
3	A/R	DOUBLE HOLD DOWN CLIP	

A/R=AS REQUIRED

D ELECTRICAL CONDUIT OR TRAY SUPPORTS

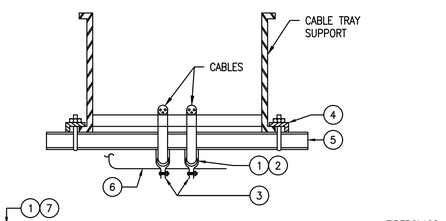

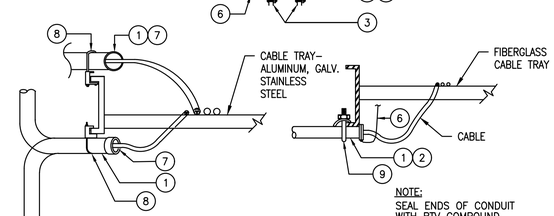

NOTE:
SEAL ENDS OF CONDUIT WITH RTV COMPOUND

BILL OF MATERIAL

ITEM	QTY	DESCRIPTION	REMARKS
1	A/R	CONDUIT	
2	A/R	INSULATED GROUNDING BUSHING	
3	A/R	CONDUIT CLAMP	
4	2	CHANNEL CLAMP	
5	1	CHANNEL STRUT	
6	A/R	BONDING WIRE TO GROUNDING POINT	
7	A/R	INSULATED BUSHING	
8	A/R	CABLE TRAY CONDUIT GROUNDING CLAMP CROUSE-HINDS TYPE LCC OR EQUAL	
9	1	TRAY CLAMP	

A/R=AS REQUIRED

E ELECTRICAL CABLE DROPS FROM TRAY

EDEC, INC.
4120 CHATTAHOOCHEE TRACE
SUITE A
DULUTH, GEORGIA 30097
TEL. (770) 493-8685

GMC

2660 Eastchase Lane
Suite 200
Montgomery, AL 36117
T 334.271.3200

1" 5" 0" 1"

ISSUE	DATE
ISSUED FOR BID	03-15-25

DESIGNER: DV
DRAWN BY: DV

COUNTY RD 29 WATER TREATMENT PLANT
PRATTVILLE WATER WORKS
PRATTVILLE, AL

CMGM230095

ALABAMA LICENSED No. 30182 PROFESSIONAL ENGINEER ALEC ZAYCHIK

ELECTRICAL INSTALLATION DETAILS

E-904

This drawing is and shall remain the property of Goodwyn, Mills and Cawood, Inc. (GMC) and Goodwyn Mills Cawood LLC (GMC). Unauthorized use of any kind including use on other projects is prohibited. In the event that a conflict arises between the sealed drawings and the electronic files, the sealed drawings will govern.

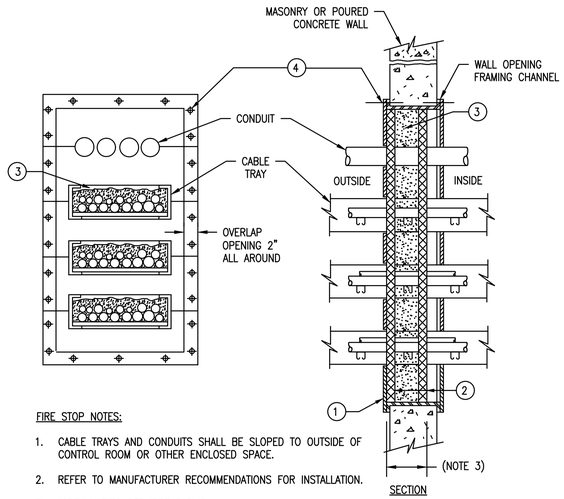

FIRE STOP NOTES:

1. CABLE TRAYS AND CONDUITS SHALL BE SLOPED TO OUTSIDE OF CONTROL ROOM OR OTHER ENCLOSED SPACE.
2. REFER TO MANUFACTURER RECOMMENDATIONS FOR INSTALLATION.
3. WIDTH VARIES PER FIRE RATING (1 HR–4", 2 HR–6", 3 HR–8")

BILL OF MATERIAL

ITEM	QTY	DESCRIPTION	REMARKS
1	2	0.125" ALUM. PLATE WITH A NEOPRENE GASKET (BOTH SIDE OF WALL)	
2	2	FIRE RATED DAMMING BOARD OR 5/8" TYPE X GYPSUM BOARD	
3	A/R	FIRE–RETARDANT COMPOUNDS	
4	A/R	SCREW ANCHORS, 6" ON CENTER OR MACHINE SCREWS FOR STEEL FRAME	

A/R=AS REQUIRED

A ELECTRICAL FIRESTOP FOR CONDUIT/CABLE TRAY THROUGH MASONRY CONCRETE

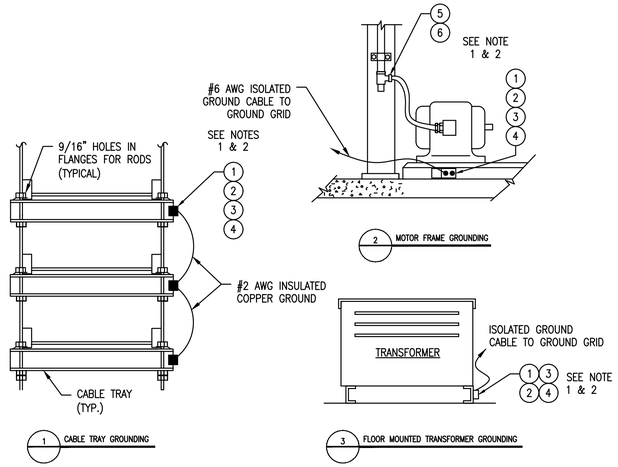

EQUIPMENT GROUNDING NOTES:

1. DRILL AND TAP (2) 3/8" U.N.C. HOLES IN EQUIPMENT OR USE NUT AND STAR WASHER ON INSIDE OF EQUIPMENT FRAME WHEN THICKNESS OF FRAME IS LESS THAN 3/8".
2. EQUIPMENT SURFACE MUST BE CLEANED TO BARE METAL AND CROUSE–HINDS TYPE STL CONDUCTING GREASE APPLIED PRIOR TO LUG ATTACHMENT

BILL OF MATERIAL

ITEM	QTY	DESCRIPTION	REMARKS
1	1	COMPRESSION LUG, 2 HOLE	
2	2	BOLT, HEX HD 3/8" UNC X 3/4" LONG	
3	2–4	WASHER STAR LOCK 3/8"	
4	0–2	NUT, HEX 3/8" UNC	
5	2	LIQUIDTIGHT CONNECTOR	
6	1	CONDENSATE DRAIN AND BREATHER	

B EQUIPMENT GROUNDING

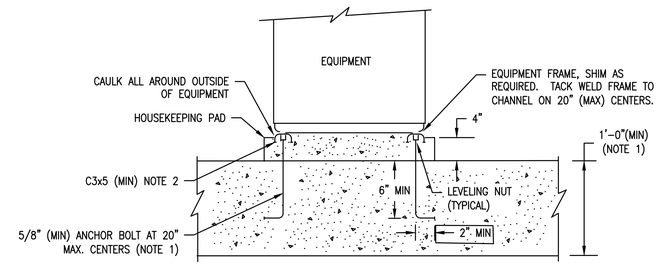

NOTES:
1. IF SLAB IS LESS THAN 12" THICK, ANCHOR BOLTS SHALL EXTEND THROUGH SLAB AND BE BACKED UP WITH 4" X 3/16" (MIN) SQUARE WASHERS.
2. CHANNELS SHALL BE LEVELED AT TIME CONCRETE IS CAST.

C TYPICAL FLOOR MOUNTING EQUIPMENT DETAIL

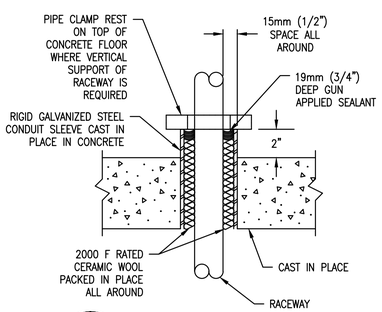

D CONDUIT SLEEVE THROUGH FLOOR

EDEC, INC.
4120 CHATTAHOOCHEE TRACE
SUITE A
DULUTH, GEORGIA 30097
TEL. (770) 493-8685

GMC

2660 Eastchase Lane
Suite 200
Montgomery, AL 36117
T 334.271.3200

ISSUE	DATE
ISSUED FOR BID	03-15-25

DESIGNER: DV
DRAWN BY: DV

COUNTY RD 29 WATER TREATMENT PLANT
PRATTVILLE WATER WORKS
PRATTVILLE, AL

CMGM230095

ALABAMA LICENSED No. 30182 PROFESSIONAL ENGINEER ALEC ZAYCHIK

ELECTRICAL INSTALLATION DETAILS

E-905

This drawing is and shall remain the property of Goodwyn, Mills and Cawood, Inc. (GMC) and Goodwyn Mills Cawood LLC (GMC). Unauthorized use of any kind including use on other projects is prohibited. In the event that a conflict arises between the sealed drawings and the electronic files, the sealed drawings will govern.

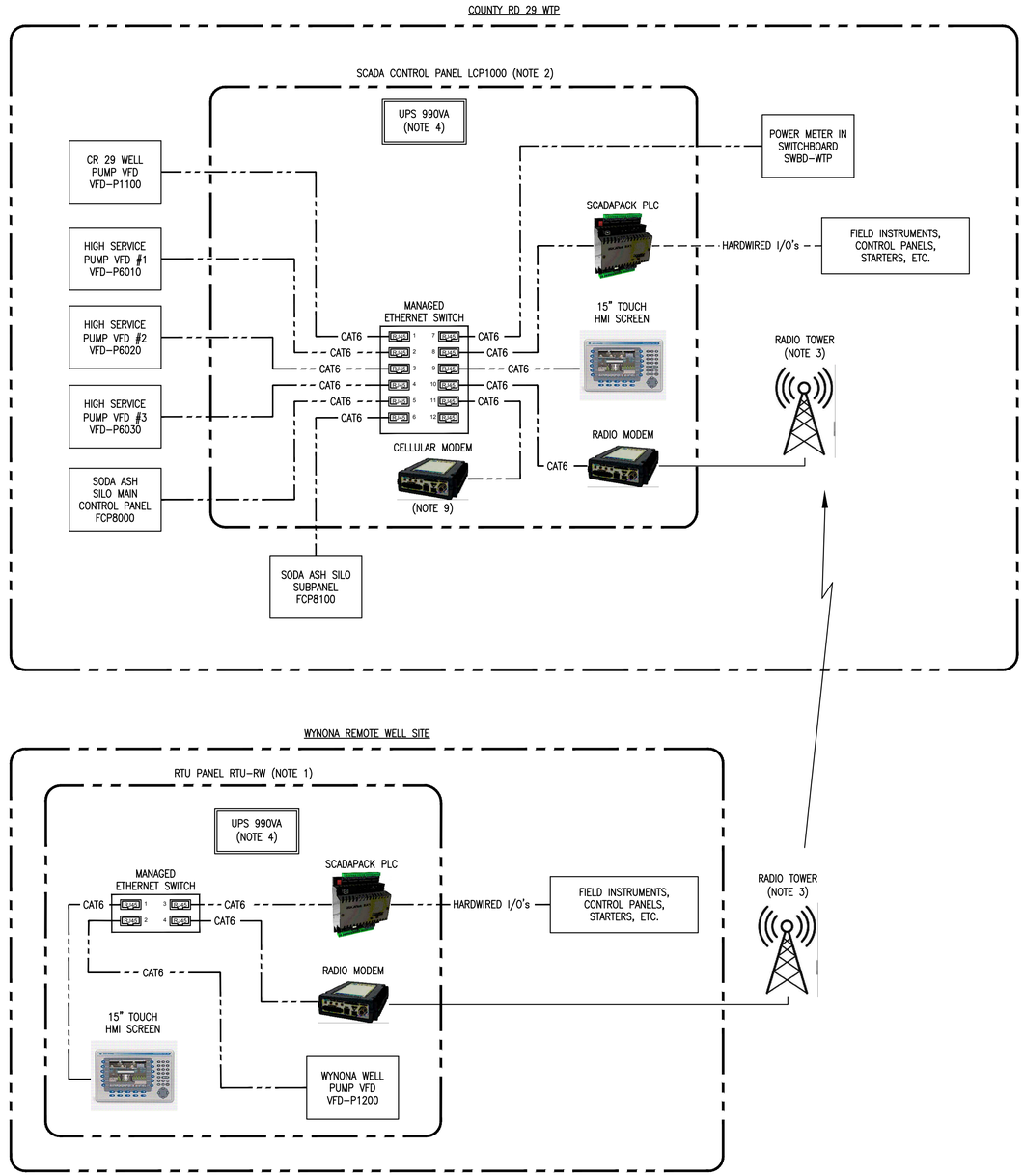

LEGEND:

CAT6	CAT6E INDUSTRIAL TYPE ETHERNET CABLE
FIBER	MULTIMODE FIBER OPTIC CABLE (12 STRANDS MIN.)
	FIELD DEVICE AND INSTRUMENTS INPUT/OUTPUTS
	RADIO CONNECTION

NOTES:

1. THE SYSTEM INTEGRATOR SHALL PROVIDE AND CONTRACTOR SHALL INSTALL A CONTROL PANEL, THE PANEL SHALL INCLUDE AS A MINIMUM THE FOLLOWING COMPONENTS:
   A. CONTROL PANEL SCCR SHALL BE 10kAIC MINIMUM.
   B. ENCLOSURE: 3-POINT LATCHING WALL MOUNTED NEMA 3R WITH FOLDING SHELF, INTERIOR LIGHT FIXTURE WITH DOOR SWITCH.
   C. MAIN DEVICE – THERMAL MAGNETIC CIRCUIT BREAKER 20A, 120, 1P.
   D. 120V, 1PH SURGE PROTECTION DEVICE.
   E. ONE (1) GFCI 120V, 20A DUPLEX RECEPTACLE.
   F. DUAL 24VDC POWER SUPPLY UNIT WITH REDUNDANCY MODULE.
   G. UPS UNIT SIZED FOR 6 HOURS OF UNINTERRUPTIBLE POWER SUPPLY.
   H. CONTROLLER – SCHNEIDER ELECTRIC SCADAPACK 474 SERIES WITH I/O MODULES AS REQUIRED.
   I. OIT – 15" TOUCH SCREEN BY EZ AUTOMATION EZ5 SERIES MOUNTED ON THE EXTERIOR DOOR.
   J. WIRELESS MODEM: RADIO BY GE MDS SD SERIES OR EQUAL.
   K. DISCRETE INPUTS TYPE: WIRED THROUGH INTERPOSING RELAYS.
   L. DISCRETE OUTPUTS TYPE: WIRED THROUGH INTERPOSING RELAYS.
   M. ANALOG INPUTS TYPE: WIRED THROUGH INTERNAL SURGE SUPPRESSORS.
   N. INCLUDE AT LEAST 20% OF SPARE I/O's OF EACH TYPE.
   O. RELAYS, FUSES, TERMINALS AND ALL OTHER COMPONENTS AS REQUIRED FOR PROPER PANEL OPERATION.

   THE SCHEMATIC WIRING DIAGRAM IS CONCEPTUAL IN NATURE. SYSTEM INTEGRATOR SHALL SUBMIT DETAILED WIRING DIAGRAM AND BOM FOR THE PANEL TO ENGINEER FOR APPROVAL, PRIOR TO FABRICATION. INCLUDE ALL ASSOCIATED PROGRAMMING, FACTORY TESTING AND OPERATORS TRAINING AND START-UP ASSISTANCE AS REQUIRED FOR A FULLY FUNCTIONAL SYSTEM. THE PANEL SHALL BE PROVIDED BY DUKE INSTRUMENT SERVICE CO., (OFFICE: 251-675-50-67).

2. THE SYSTEM INTEGRATOR SHALL PROVIDE AND CONTRACTOR SHALL INSTALL A CONTROL PANEL, THE PANEL SHALL INCLUDE AS A MINIMUM THE FOLLOWING COMPONENTS:
   A. CONTROL PANEL SCCR SHALL BE 10kAIC MINIMUM.
   B. ENCLOSURE: 3-POINT LATCHING FLOOR MOUNTED NEMA 1 WITH FOLDING SHELF, INTERIOR LIGHT FIXTURE WITH DOOR SWITCH.
   C. MAIN DEVICE – THERMAL MAGNETIC CIRCUIT BREAKER 30A, 120, 1P.
   D. 120V, 1PH SURGE PROTECTION DEVICE.
   E. ONE (1) GFCI 120V, 20A DUPLEX RECEPTACLE.
   F. DUAL 24VDC POWER SUPPLY UNIT WITH REDUNDANCY MODULE.
   G. UPS UNIT SIZED FOR 6 HOURS OF UNINTERRUPTIBLE POWER SUPPLY.
   H. CONTROLLER – SCHNEIDER ELECTRIC SCADAPACK 474 SERIES WITH I/O MODULES AS REQUIRED.
   I. OIT – 15" TOUCH SCREEN BY EZ AUTOMATION EZ5 SERIES MOUNTED ON THE EXTERIOR DOOR.
   J. WIRELESS MODEM: RADIO BY GE MDS SD SERIES OR EQUAL.
   K. CELLULAR MODEM.
   L. DISCRETE INPUTS TYPE: WIRED THROUGH INTERPOSING RELAYS.
   M. DISCRETE OUTPUTS TYPE: WIRED THROUGH INTERPOSING RELAYS.
   N. ANALOG INPUTS TYPE: WIRED THROUGH INTERNAL SURGE SUPPRESSORS.
   O. INCLUDE AT LEAST 20% OF SPARE I/O's OF EACH TYPE.
   P. RELAYS, FUSES, TERMINALS AND ALL OTHER COMPONENTS AS REQUIRED FOR PROPER PANEL OPERATION.

   THE SCHEMATIC WIRING DIAGRAM IS CONCEPTUAL IN NATURE. SYSTEM INTEGRATOR SHALL SUBMIT DETAILED WIRING DIAGRAM AND BOM FOR THE PANEL TO ENGINEER FOR APPROVAL, PRIOR TO FABRICATION. INCLUDE ALL ASSOCIATED PROGRAMMING, FACTORY TESTING AND OPERATORS TRAINING AND START-UP ASSISTANCE AS REQUIRED FOR A FULLY FUNCTIONAL SYSTEM. THE PANEL SHALL BE PROVIDED BY DUKE INSTRUMENT SERVICE CO., (OFFICE: 251-675-50-67).

3. THE SYSTEM INTEGRATOR SHALL INCLUDE A RADIO SURVEY TO DETERMINE REQUIREMENTS FOR THE NEW RADIO TOWER AND ADJUST TOWER SELECTION ACCORDINGLY TO ENSURE PROPER COMMUNICATION BETWEEN THE SITES.

4. THE CONTRACTOR SHALL PROVIDE AND INSTALL 990VA (MIN.) LOCAL UPS's TO FEED ALL NETWORK EQUIPMENT, INCLUDING BUT NOT LIMITED TO SWITCHES, MEDIA CONVERTERS, ETC.

5. ALL NETWORK CABLES SHALL BE INSTALLED IN CONDUITS WHERE APPLICABLE, USE 3/4" MIN. CONDUITS FOR ALL CAT6 NETWORKS CABLES AND 2" MIN. FOR FIBER OPTIC CABLES.

6. ALL PLC's SHALL HAVE ETHERNET COMMUNICATION CAPABILITIES. THE SYSTEM INTEGRATOR SHALL COORDINATE ALL DEVICES COMMUNICATION PROTOCOLS AND MEDIA, AND PROVIDE ALL THE REQUIRED MEDIA CONVERTERS FOR PROPER COMMUNICATION BETWEEN THE DEVICES.

7. SCADA HMI SOFTWARE SHALL MATCH THE EXISTING SCADA HMI SOFTWARE USED FOR THE CITY'S CURRENT SETUP. REMOTE NOTIFICATION SOFTWARE (WIN-911 OR EQUAL) SHALL HAVE REMOTE ALARM CAPABILITIES THROUGH EMAIL, TEXT MASSAGING AND VOICE FOR CRITICAL ALARMS.

8. SCADA SYSTEM SHALL BE CAPABLE OF PRE-PROGRAMMED RESTARTING SEQUENCE OF THE PLANT EQUIPMENT AFTER A POWER FAILURE. SCADA SYSTEM SHALL PROVIDE ADJUSTABLE TIME DELAYS BETWEEN EQUIPMENT START AFTER RETURN OF POWER. ONLY MOTORS MARKED WITH "G" ON THE ONE LINE DIAGRAMS DWG. E-101 AND E-111 SHALL BE ALLOWED TO BE STARTED WHEN GENERATOR IS RUNNING. THE STARTING SEQUENCE UPON GENERATORS RUNNING IS SHOWN ON ONE LINE DIAGRAMS DWG. E-101 AND E-111.

9. THE SYSTEM INTEGRATOR SHALL SETUP A CELLULAR MODEM AT THE PLANT TO ALLOW REMOTE ACCESS TO THE PLANT SCADA NETWORK FOR REMOTE MONITORING AND ALARM NOTIFICATIONS. THE PLANT AND WYNONA WELL SITE I/O'S SHALL BE AVAILABLE THROUGH A CELLULAR NETWORK CONNECTION AT THE CITY'S MAIN OFFICE SCADA HMI. THE SYSTEM INTEGRATOR SHALL INCLUDE ALL THE REQUIRED MODIFICATIONS TO THE EXISTING SCADA NETWORK/SYSTEM INCLUDING, BUT NOT LIMITED TO SOFTWARE, HARDWARE, GRAPHICS CHANGES/ADDITION AND PROGRAMMING MODIFICATIONS TO ACCOMMODATE THE CONNECTION WITH THE NEW FACILITIES.

EDEC, INC.
4120 CHATTAHOOCHEE TRACE
SUITE A
DULUTH, GEORGIA 30097
TEL. (770) 493-8685

GMC

2660 Eastchase Lane
Suite 200
Montgomery, AL 36117
T 334.271.3200

1" 5" 0" 1"

ISSUE	DATE
ISSUED FOR BID	03-15-25

DESIGNER: DV
DRAWN BY: DV

COUNTY RD 29 WATER TREATMENT PLANT
PRATTVILLE WATER WORKS
PRATTVILLE, AL

CMGM230095

ALABAMA LICENSED No. 30182 PROFESSIONAL ENGINEER ALEC ZAYCHIK

SCADA BLOCK DIAGRAM

I-001

This drawing is and shall remain the property of Goodwyn, Mills and Cawood, Inc. (GMC) and Goodwyn Mills Cawood LLC (GMC). Unauthorized use of any kind including use on other projects is prohibited. In the event that a conflict arises between the sealed drawings and the electronic files, the sealed drawings will govern.

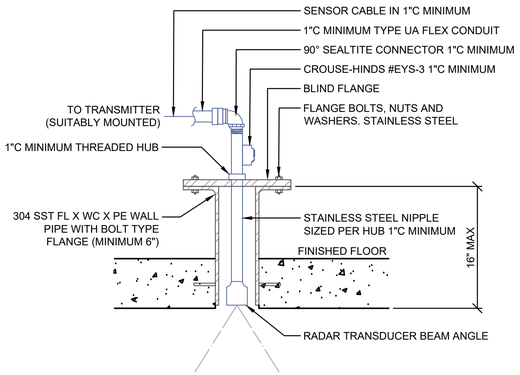

A I-901 **IN SLAB RADAR TRANSDUCER MOUNTING**

SCALE: NOT TO SCALE

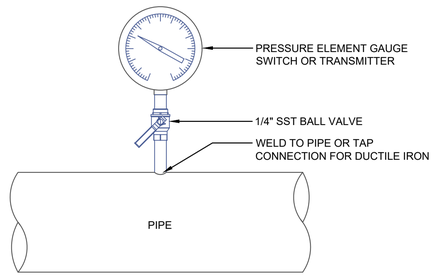

B I-901 **PRESSURE ELEMENT**

SCALE: NOT TO SCALE

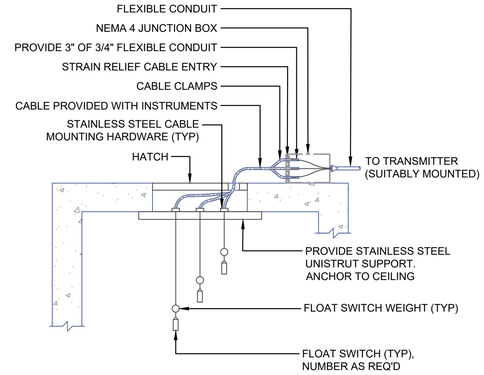

C I-901 **WEIGHTED FLOAT LEVEL SWITCH**

SCALE: NOT TO SCALE

GMC

2660 Eastchase Lane
Suite 200
Montgomery, AL 36117
T 334.271.3200

1" 5" 0" 1"

ISSUE	DATE
90% SUBMITTAL	01.24.2025
ISSUED FOR BID	03.14.2025
CONFORMED SET:	

PROJECT MANGER:	JP
ENGINEER:	DT
DESIGNER:	DT
DRAWN BY:	HKD/FN

COUNTY RD 29 WATER TREATMENT PLANT
PRATTVILLE WATER WORKS
PRATTVILLE, AL

CMGM230095

ALABAMA LICENSED 03/18/2025 No. 36869 PROFESSIONAL ENGINEER AUSTIN ALLEN TILLEY

INSTRUMENTATION DETAILS

I-901

DRAWING FILE: C:\Users\dill\DC\ACCDocs\GMC\Prattville WTP on CR 29\CAD Files\DWG\02 Sheets\02 Instrumentation\I-901.dwg
PLOTTED: Apr 01, 2025 - 2:43pm

This drawing is and shall remain the property of Goodwyn, Mills and Cawood, Inc. (GMC) and Goodwyn Mills Cawood LLC (GMC). Unauthorized use of any kind including use on other projects is prohibited. In the event that a conflict arises between the sealed drawings and the electronic files, the sealed drawings will govern.

MECHANICAL SPECIFICATIONS

1) Provide all heating, ventilation and air conditioning items indicated on the drawings, described in this specification, or required for a complete and proper installation.

2) Comply with all pertinent codes, ordinances, and regulations. Refer to website for Dept. of Community Affairs for current Codes Editions.

3) The contractor shall not attempt to precisely scale dimensions from these drawings to obtain construction dimensions and clearances. The contractor shall verify all actual dimensions and clearances. Although these plans are diagrammatic in nature, they shall be followed as closely as site conditions, new construction, and work by other trades shall permit. Deviations from these drawings, which are required to conform to the available space or the actual building construction, shall be made at no additional cost to the owner.

4) Furnish without extra charge, any additional material and labor required to comply with the above codes and standards, even though the work may not be described in the contract documents. Where the requirements of the contract documents exceed the requirements of the above codes and standards, the contract documents shall take precedence.

5) All equipment and material shall be new and of first quality. Equipment and material shall be the same or equal to the basis of design listed on these drawings and shall be UL listed.

6) Cooperate and coordinate with other trades in order that all systems in the work may be installed in the best arrangement.

7) Examine the areas and conditions under which work of this section will be installed. Correct conditions detrimental to the proper and timely completion of the work. Notify Architect of any discrepancies. Do not proceed until unsatisfactory conditions have been corrected.

8) Avoid interference with structure, and with work of other trades. Install all equipment per manufacturer's instructions. Install accessible parts, including equipment, coils, valves, dampers, controls, and filters with adequate clearance for inspection, adjustments, repair, and replacement.

9) All other materials not specifically described but required for a complete and proper installation shall be as selected by the contractor subject to acceptance by the Engineer.

10) All ductwork shall be fabricated from galvanized sheet metal duct and conform to SMACNA "HVAC Duct Construction Standards–Metal and Flexible. Seal all joints in ductwork with mastic sealant.

11) Outside duct Insulation: Insulate ducts and fittings with two, staggered layers of ½–inch foamed plastic sheet insulation, (Arma–Flex sheets) 6–pound density, having a thermal conductivity of not more than 0.28 at 75ºF. Apply insulation with smooth side out of coating both surfaces to be joined completely with a thin coat of waterproof instant bonding adhesive. Adjacent sheets shall fit under compression. Apply a 16–mil embossed aluminum jacket with a 2–inch overlap at longitudinal and transverse joints, secured in place with ⅜–inch by .015–inch aluminum bands on 18–inch centers. Overall insulation value must be R–8 for exterior duct as per ASHRAE 90.1 & IECC.

12) Condensate drain piping shall be ASTM D2665 PVC with solvent welded fittings. Drain piping shall be no smaller than the drain connection size on equipment. Slope at 1/8 inch per foot continuously toward drains. All indoor condensate drain piping shall be insulated with preformed flexible plastic cellular foam. All outdoor condensate drain piping shall be primed and painted with a coating system recommended by the piping manufacturer for protection against deterioration from weather and UV–light exposure. All piping shall be adequately supported to maintain proper slope and avoid sagging.

13) Refrigerant piping shall conform to manufacturer's recommendations and installation instructions. Refrigerant piping shall be ASTM B280 Type ACR or ASTM B88 Type L drawn copper tubing with wrought copper fittings. Insulate suction line with ½" thick flexible foamed plastic cellular foam (Armaflex or equivalent). All piping shall be adequately supported. Insulation installed outdoors shall be painted with two coats of Armacell WB coating or equivalent. Refrigerant pipes shall be installed in accordance with ASHRAE standard 15–2022 section 9.12 and shall be tested in accordance with ASHRAE standard 15–2022 section 9.13. Contractor shall issue a letter to design team stating that refrigerant pipes has been installed and tested under the referenced sections. Contractor shall refer to ASHRAE standard 15–2022 sections 9.10 and 9.11 for additional information regarding refrigerant piping. Penetration of refrigerant pipes shall be protected with a through penetration protection means. The through penetration protection shall be the same or higher rating than the assembly.

14) Thermostats: Provide 24 volt, programmable 24–hour, 7–day thermostat to control heating stages in sequence with delay between stages and supply fan to maintain temperature setting. For Heat Pumps include system selection switch heat–off–cool and fan control switch (auto–on), emergency heat switch (auxiliary/emergency heat indicator lights).

15) Provide fire and smoke rated flexible connections between fans and ducts. Material shall comply with NFPA 90A requirements for material in supply air stream.

16) Install all equipment in accordance with manufacturer's instructions and recommendations including clearances recommended for proper operation or service. All filters and serviceable parts shall be readily accessible.

17) Do not cut into or reduce the size of any structural member without the permission of the Architect.

18) Provide weather–proof flashing at all duct and pipe penetrations through the building walls and roof. As a minimum, flashings shall be designed and installed in accordance with SMACNA standards. Flashings shall be guaranteed weatherproof.

19) Support all HVAC units, ductwork, piping, and other appurtenances from structure, provide vibration isolation at all fans which are not internally isolated. Provide hanger rod with built in rubber–in–shear isolator. Between drain pan and unit provide 4 each rubber–in–shear isolator. Do not attach vibration isolator to drain pan. Do not screw or drive fasteners into non–structural components such as roof decks or non–load bearing walls.

20) Thoroughly clean all components and remove all dirt, scale, oil, and other foreign substances. Provide clean air filters for all equipment.

21) Perform all tests necessary to demonstrate the integrity of the complete installation to the approval of the Engineer and all other authorities having jurisdiction. Make all adjustments necessary and balance the completed system in accordance with the data shown. Balance the systems in accordance with NEBB or AABC standards. Acceptable tolerances shall be minus ten percent to plus five percent of all measurements. Balancing shall be done by an independent licensed (by NEBB or AABC) TAB contractor. Make the following tests and submit reports to the Architect:
   a) Airflow rate at each supply, return and exhaust outlet or inlet.
   b) Total airflow rate and total static pressure for each supply and exhaust fan. Test exhaust fans with room doors closed.
   c) Motor speed, for multiple speed fans (e.g. high, medium, low).
   d) For direct drive fans, provide speed settings and actual rpm, including ECM motor driven fans
   e) Provide fan and motor rpm for belt driven fans. Provide sheave sizes.
   f) Outside airflow rate to each HVAC unit and supply fan.
   g) Motor current (and compare with nameplate data) at all motors.
   h) Entering and leaving air dry–bulb and wet–bulb conditions at all cooling coils.
   i) Heat output capacity for unit heaters, heating devices and coils (kW or MBH).
   j) Manufacturer, model, and serial number for each piece of HVAC equipment scheduled on drawings.
   k) Calibrate thermostats to be within one degree of actual temperature at thermostat.
   l) Verify that all HVAC devices operate as scheduled or indicated (i.e. ON–OFF, 2–stage, variable output (SCR heaters), etc.

22) The entire system shall be warranted for a period of one (1) year beginning with Owner's acceptance of the work. Compressors shall include a minimum of five (5) year parts only warranty from the manufacturer. All labor and materials necessary to repair or replace the system or portions thereof, during that time shall be warranted for a period of one (1) year from the repair of replacement.

23) SUBMITTALS AND SUBMITTAL PROCEDURES:
   a. Contractor shall review the submittal data and check for the purpose of compliance with safety requirements, verification of dimensions, contract documents and methods and means prior to submitting to design professional. Contractor shall indicate approval by indicating such on the submittal.
   b. Transmit each submittal electronically in PDF format.
   c. Sequentially number submittal files and transmittal form. Revise submittals with original number and a sequential alphabetic suffix. File names shall describe item included in file.
   d. Identify Project, the Contractor, Subcontractor, or supplier; pertinent drawing and detail number, and specification section number, as appropriate on each copy. Each file shall include an index of items included in file. Apply the Contractor's stamp, signed or initialed certifying that review, approval, verification of Products required, field dimensions, adjacent construction Work, and coordination of information is in accordance with the requirements of the Work and Contract Documents.
   e. Submittal data for all items in project shall be submitted at one time. Submittal shall be divided into groups with file sizes not exceeding 6 MB. If there is unavailable data such as control submittal, etc., these may be submitted later if not doing so would delay project progress. Data shall include capacities, complete installation instructions, dimensional data and electrical data, BHP, motor HP, operating weights, and load distribution at mounting points.
   f. Deliver submittals electronically to the Design Professional.
   g. Schedule submittals to expedite the Project, and coordinate submission of related items.
   h. For each submittal for review, allow 15 days excluding delivery time to and from the Contractor.
   i. Identify variations from Contract Documents and Product or system limitations that may be detrimental to successful performance of the completed Work.
   j. Provide space for the Contractor and the Architect/ review stamps.
   k. When revised for resubmission, identify all changes made since previous submission.
   l. Distribute copies of reviewed submittals as appropriate. Instruct parties to promptly report any inability to comply with requirements.
   m. Submittals not requested will not be recognized or processed.
   n. Provide files containing only related items (such as piping, equipment, air distribution, etc.)

24) Instruct Owner's representative in the operation of the systems, using the operation and maintenance manual as a teaching aid.

25) Provide an operation and maintenance manual. As a minimum, the manual shall contain:
   a. A complete list of all equipment and appurtenances with equipment designations (per Drawings), manufacturers, and catalog numbers.
   b. Copies of manufacturers' brochures and instructions for operation and maintenance of all mechanical equipment, including replacement parts lists.
   c. Typed system operation and maintenance instructions, including inspection, lubrication, and service instructions and schedules.
   d. List of names, addresses and phone numbers of distributors of all equipment and appurtenances.
   e. Manufacturers' warranties.

26) Indoor, direct–expansion, wall–mounted fan coil. Unit shall be complete with cooling/heating coil, fan, fan motor, piping connectors, electrical controls, microprocessor control system, and integral temperature sensing. Unit shall be furnished with integral wall mounting bracket and mounting hardware. Cabinet discharge and inlet grilles shall be attractively styled, high–impact polystyrene. Cabinet shall be fully insulated for improved thermal and acoustic performance. Fan shall be tangential direct–drive blower type with air intake at the top of the unit and discharge at the bottom front. Automatic, motor–driven vertical air sweep shall be provided standard. Air sweep operation shall be user selectable. The vertical sweep may be adjusted (using the remote control) and the horizontal air direction may be set manually. Coil shall be copper tube with aluminum fins and galvanized steel tube sheets. Fins shall be bonded to the tubes by mechanical expansion and golden hydrophilic pre–coated. A drip pan under the coil shall have a drain connection for hose attachment to remove condensate. Condensate pan shall have internal trap. Motors shall be open drip–proof, permanently lubricated ball bearing with inherent overload protection. Fan motors shall be 4–speed. Controls shall consist of a microprocessor–based control system which shall control space temperature, determine optimum fan speed, and run self–diagnostics. The temperature control range shall be from 62ºF to 86ºF (17ºC to 30ºC) in increments of 1ºF or 1ºC, and have 46ºF Heating Mode (Heating Setback). The wireless or wired remote controller shall have the ability to act as the temperature sensing location for room comfort. Refer to schedule for preference on wired or wireless thermostat. The unit shall have the following functions as a minimum: An automatic restart after power failure at the same operating conditions as at failure. A timer functions to provide a minimum 24–hour timer cycle for system Auto Start/Stop. Temperature–sensing controls shall sense return air temperature. Indoor coil freeze protection. Wireless infrared remote control and/or wired remote control as scheduled to enter set points and operating conditions. Automatic air sweep control to provide on or off activation of air sweep louvers. Dehumidification mode shall provide increased latent removal capability by modulating system operation and set point temperature. Fan–only operation to provide room air circulation when no cooling is required. Diagnostics shall provide continuous checks of unit operation and warn of possible malfunctions. Error messages shall be displayed at the unit. Fan speed control shall be user–selectable: high, medium, low, or microprocessor controlled automatic operation during all operating modes. Automatic heating–to–cooling changeover in heat pump mode. Control shall include deadband to prevent rapid mode cycling between heating and cooling. Indoor coil high temperature protection shall be provided to detect excessive indoor discharge temperature when unit is in heat pump mode. Unit shall have filter track with factory–supplied cleanable filters. Indoor fan motor to operate on 115V on model size 12 and on 208–230V on model sizes 09–36, as specified. Power is supplied from the outdoor unit. All units should have refrigerant lines that can be oriented to connect from the left, right or back of unit. Both refrigerant lines need to be insulated. The condensate pump shall remove condensate from the drain pan when gravity drainage cannot be used. Pump shall be designed for quiet operation. Pump shall consist of two parts: an internal reservoir/sensor assembly, and a remote sound–shielded pump assembly. A liquid level sensor in the reservoir shall stop cooling operation if the liquid level in the reservoir is unacceptable. Refer to schedule for providing condensate pump. Only provide condensate pump were indicated on schedule.

27) Small Split Condensing unit: Casing: House components in welded steel frame with galvanized steel panels with weather resistant, baked enamel finish. Mount contactors and controls in weatherproof panel provided with full opening access doors. Provide removable access doors or panels with quick fasteners. Compressor: Hermetically sealed, 3600 rpm maximum, resiliently mounted with positive lubrication and internal motor protection. Compressor: Hermetic reciprocating type or Hermetic scroll type. Condenser Coils: Aluminum fins mechanically bonded to seamless copper tubing or all aluminum fins and tube. Air test under water to 425 psig, and vacuum dehydrate. Seal with holding charge of refrigerant. Coil Guard: Louvered or PVC coat steel wire. Fans and motors: Direct driven propeller type condenser fans with fan guard on discharge. Weatherproof motors suitable for outdoor use, single phase permanent split capacitor with permanent lubricated ball bearings and built in thermal overload protection. Fan Guard: PVC coat steel wire. Refrigerant circuit: For each refrigerant circuit, provide: Filter dryer liquid line. Suction accumulator. Suction and liquid line service valves and gage ports. Charging valve. Condenser pressure relief mechanism. Factory wired with single point power connection. Factory wired controls shall include contactor, high– and low–pressure cutouts, internal winding thermostat for compressor, control circuit transformer, non–cycling reset relay. Provide a surge capacitor and lightning arrestor in unit cabinet for protection from power surges due to lightning and switching transients. Provide controls to permit operation down to 0 degrees F ambient temperature were scheduled to include: Crankcase heater with thermostat. Head pressure switch to cycle fan motors in response to refrigerant condensing pressure. Solid state control to vary speed of one condenser fan motor in response to refrigerant condensing pressure. Refer to Schedule on Drawings for additional specifications.

28) Wall fans shall be direct– or belt–driven propeller fans, as scheduled, consisting of wall housing, wheel, fan shaft, bearings, motor and disconnect switch, drive assembly, and accessories including but not limited to ½" mesh bird screen, flanged wall discharge shutter, and OSHA guard. Housing shall be heavy–gage, galvanized steel or painted aluminum, with a venturi inlet cone.

29) Basic motor requirements: basic requirements apply to mechanical equipment motors, unless otherwise indicated. Motors 1/2 hp and larger: Polyphase, unless otherwise scheduled. Motors smaller than 1/2 hp: single phase. Frequency rating: 60 Hz. Service factor: according to NEMA MG 1, general purpose continuous duty, design type "B." Enclosure: open drip–proof, unless otherwise indicated. Efficiency: motors shall have a higher efficiency rating than industry standard average motor as delineated in IEEE Standard 112, test method 13. Thermal protection: where indicated or required, internal protection automatically opens power supply circuit to motor when winding temperature exceeds a safe value calibrated to temperature rating of motor insulation. Thermal protection device automatically resets when motor temperature returns to normal range, unless otherwise indicated.

30) Hangers and supports: Building attachments: concrete inserts or structural–steel fasteners appropriate for building materials, and beam clamps. Hanger materials: galvanized, sheet steel or round, threaded steel rod. Hangers installed in corrosive atmospheres: electrogalvanized, all–thread rod or galvanized rods with threads painted after installation. Straps and rod sizes: comply with SMACNA's "HVAC Duct Construction Standards––Metal and Flexible" for sheet steel width and thickness and for steel rod diameters. Duct attachments: sheet metal screws, blind rivets, or self–tapping metal screws; compatible with duct materials. Trapeze and riser support galvanized steel shapes and plates: steel shapes complying with ASTM A 36/A 36M.

31) Sealant materials: joint and seam sealants, general: the term "sealant" is not limited to materials of adhesive or mastic nature but includes tapes and combinations of open–weave fabric strips and mastics. Joint and seam tape: 2 inches wide; glass–fiber fabric reinforced. Joint and seam sealant: one–part, nonsag, solvent–release–curing, polymerized butyl sealant, formulated with a minimum of 75 percent solids. Flanged joint mastics: one–part, acid–curing, silicone, elastomeric joint sealants, complying with ASTM C 920, type S, grade NS, class 25, use O. Unit Heaters–Electric: Electric unit blower heaters shall be UL listed, CSA certified and CE marked for use in dirty and corrosive environments. The heater shall be NEMA 4X rated for hose down requirements. Heaters to allow mounting positioning for horizontal or vertical operation. Heater to be of the kW rating, voltage, phase, and cycles specified in the schedule. Heating elements shall be typing 316 stainless steel tubing and type 316 stainless steel fins for maximum heat dissipation. The elements shall consist of high–quality resistance wire imbedded in a compacted magnesium oxide refractory for excellent dielectric strength and optimum thermal conductivity. The heaters shall be protected by a high temperature cutout. The fan assembly shall include a UL listed and CSA certified, totally enclosed, epoxy painted motor with permanently lubricated ball bearings designed to resist moisture and corrosion. The epoxy coated aluminum fan blade shall be dynamically balanced for vibration free operational exposed sheet metal surfaces shall be constructed of type 304 stainless steel; the 20–gauge case shall be roll formed with beaded edges to insure rigidity. A louvered outlet grill shall be painted with zinc chromate primer and two coats of corrosion resistant epoxy paint. A NEMA 4X control enclosure shall contain the pre–wired built in controls: automatic reset over–temperature cutout, fan delay relay, heater contactor, motor contactor, terminal block and 120V control transformer. Standard mounting hardware shall consist of three (3) L shaped gauge 304 stainless steel mounting brackets for mounting the heater directly to a wall for horizontal airflow or ceiling for vertical airflow. Refer to drawing for additional information.

32) All HVAC equipment such as AH, CU, EF, AC, HP, and RTU shall have visible nameplates with their associated marks on them.

33) Louvers: 4" deep, 12 gauge (0.081) etched and 30–minute clear anodized extruded aluminum, drainable blades, and frame; back mounted 1/2" mesh 19–gauge screen; flange frame. Louver shall be rated for no water carry–through at 900 face velocity, 0.15" maximum pressure drop for 4–foot square sample tested according to AMCA Standard 500, 1973. American Warming LE–33 (alum.); Ruskin [ELF–6375D; Louvers & Dampers IEL–6; Industrial Louvers 653 alum.; Vent Products #4650; Shipman LE–33 (alum.); Arrow United EA615–D (alum.); Greenheck ESD–603. Provide adapter to match corrugations in metal panel.

34) Acceptable Manufacturers are:

Small Split Units:	Mitsubishi, Daikin, Hitachi, Toshiba
Fans:	Cook, Greenheck, Penn Barry, Acme, Captive Air
Electric Heaters:	Markel, Q–Mark, Chroma Iax, Indica
Louvers/Dampers:	United Enertech, Greenheck, Ruskin, Arrow United,Air Balance (Color selection submitted to Architect)

Controls–provided with unit: Provide thermostats by same manufacturer as equipment

EDEC, INC.
4120 CHATTAHOOCHEE TRACE
SUITE A
DULUTH, GEORGIA 30097
TEL. (770) 493-8685

GMC
2660 Eastchase Lane
Suite 200
Montgomery, AL 36117
T 334.271.3200

ISSUE	DATE
ISSUED FOR BID	03-15-25
ADDENDUM 1	03-28-25

DESIGNER: DV
DRAWN BY: DV

COUNTY RD 29 WATER TREATMENT PLANT
PRATTVILLE WATER WORKS
PRATTVILLE, AL
CMGM230095

ALABAMA LICENSED No. 30132 PROFESSIONAL ENGINEER ALEC ZAYCHIK

MECHANICAL SPECIFICATIONS

M-001

This drawing is and shall remain the property of Goodwyn, Mills and Cawood, Inc. (GMC) and Goodwyn Mills Cawood LLC (GMC). Unauthorized use of any kind including use on other projects is prohibited. In the event that a conflict arises between the sealed drawings and the electronic files, the sealed drawings will govern.

FAN SCHEDULE

MARK	CFM	EXT. SP IN W.G.	DRIVE TYPE	MOTOR HP/W	MAX FAN (RPM)	MAX TIP SPEED FPM	POWER/ PHASE	LAY-OUT BASIS: GREENHECK	NOTES
EF-1	4,000	0.25	DIRECT	3/4	1580	8325	460/3	AER-20	1:2:3:4:5:6
EF-2	4,000	0.25	DIRECT	3/4	1580	8325	460/3	AER-20	1:2:3:4:5:6
EF-3	450	0.25	DIRECT	1/10 HP	1590	4525	115/1	CUE-090-VG	1:7:8:9:10:11:12

1. VERIFY ELECTRIC POWER REQUIREMENTS WITH ELECTRICAL PLANS, WHICH TAKE PRECEDENCE OVER THIS INFORMATION.
2. SIDE WALL DIRECT DRIVE PROPELLER FAN. PROVIDE WALL MOUNTING BOOT, NEMA 1 DISCONNECT SWITCH, GRAVITY OUTLET SHUTTER, WEATHER HOOD, MOTOR GUARD AND SOLID STATE SPEED CONTROLLER.
3. FAN SHALL BE OF EXTRA HEAVY WELDED CONSTRUCTION. EXHAUST FAN AND GRAVITY SHUTTERS SHALL BE INTERNALLY AND EXTERNALLY COATED(INCLUDING WHEEL AND ALL SURFACES IN AIRSTREAM) SUITABLE FOR SEVERELY CORROSIVE ATMOSPHERES(POTASSIUM PERMANGANATE & SODA ASH).
4. COATING SHALL BE FACTORY APPLIED POLYESTER COATING, GREENHECK HI-PRO POLYESTER. TOP OF SUPPLY AIR FAN AT BOTTOM OF STRUCTURE.
5. SIDE WALL EXHAUST FAN, ALUMINUM WEATHER HOOD SHALL BE 45-DEGREES.
6. FAN SHALL BE CONTROLLED BY MANUFACTURER'S STARTER DISCONNECT MSAC-1-9.
7. VERIFY ELECTRIC POWER REQUIREMENTS WITH ELECTRICAL PLANS, WHICH TAKE PRECEDENCE OVER THIS INFORMATION. BOTTOM OF FAN AT 12"-INCHES AFF. COORDINATE EXACT ELEVATION WITH ARCHITECT.
8. CENTRIFUGAL WALL MOUNT FAN. PROVIDE WALL MOUNTING BRACKET, GRAVITY SHUTTER WITH BUG SCREEN, EC MOTOR, AND SPEED CONTROLLER. ALL PARTS SHALL BE INTERNALLY AND EXTERNALLY COATED(INCLUDING WHEEL AND ALL SURFACES IN AIR STREAM)
9. PROVIDE ALL INTERNALLY AND EXTERNALLY COATED(INCLUDING WHEEL AND ALL SURFACES IN AIR STREAM) SUITABLE FOR SEVERELY CORROSIVE ATMOSPHERES. COATING SHALL BE FACTORY APPLIED HI-PRO POLYESTER COATING.
10. POLYSTER COATING SHALL BE GREENHECK HI-PRO POLYSTER OR EQUAL. PROVIDE MANUFACTURER'S WALL GRILL.
11. FAN SHALL BE CONTROLLED BY CORROSION RESISTANCE LINE VOLTAGE THERMOSTAT.
12. PROVIDE WALL SWITCH TO OVERRIDE THERMOSTAT AND ENERGIZE THE FAN PRIOR TO ENTERING ROOM.

MECHANICAL SYMBOLS & ABBREVIATIONS LEGEND

	NEW PIPE, DUCTWORK OR EQUIPMENT
24x12 24x12	DUCT SIZE: FIRST DIMENSION IS SIDE DRAWN
	FLEXIBLE ROUND DUCTWORK
F, SCD, SD	FIRE DAMPER, SMOKE DAMPER, SMOKE DETECTOR
	CEILING SUPPLY DIFFUSER
	CEILING RETURN OR EXHAUST AIR
	S.A DUCT OUT OF TU BOX WITH DUCT LINER FOR THR FIRST FIVE FEET OF DUCT OUT OF TU BOX
	SIDEWALL REGISTER OR GRILLE
	CHANGE IN PIPE OR DUCT SIZE OR SHAPE
R	REFRIGERANT PIPING
D	CONDENSATE OR OTHER DRAIN PIPING
	ELBOW TURNED DOWN OR TURNED UP IN PIPING
T	THERMOSTAT, ARROW SHOWS CONTROL WIRING PATH
TC	TIME CLOCK
ø	DIAMETER
U.C.	UNDER-CUT DOOR 3/4", UNLESS OTHER SIZE NOTED
20 / 16	INDICATES EQUIPMENT ON PLANS; TOP ITEM SHOWS TYPE OF EQUIPMENT AND BOTTOM ITEM SHOWS SPECIFIC MARK NUMBER
4 S1 8"ø / 300	ITEM IN HEXAGON SHOWS AIR DEVICE MARK NUMBER, ITEM ABOVE LINE SHOWS NECK SIZE, ITEM BELOW LINE SHOWS AIR FLOW THROUGH DEVICE, AND NUMBER IN FRONT SHOWS QUANTITY IF MORE THAN ONE
AFF	ABOVE FINISHED FLOOR
AH	AIR HANDLING UNIT
BD	BYPASS DAMPER
BTUH, MBH	BRITISH THERMAL UNITS, THOUSAND BRITISH THERMAL UNITS
CAP	CAPACITY
CFM	CUBIC FEET PER MINUTE
CLG	CEILING
CU	CONDENSING UNIT
DB, WB	DRY BULB TEMPERATURE, WET BULB TEMPERATURE
EA, EG	EXHAUST AIR, EXHAUST GRILLE
EF	EXHAUST FAN
EXT SP	EXTERNAL STATIC PRESSURE (USUALLY EXPRESSED IN INCHES OF WATER IN GAGE)
HP	HEAT PUMP UNIT
MVD, VD	MANUAL VOLUME DAMPER
OA	OUTSIDE AIR
RA, RG	RETURN AIR, RETURN GRILLE
RTU	PACKAGED ROOFTOP UNIT
SA	SUPPLY AIR
SF	SUPPLY FAN FOR SHOP VENTILATION
VAC, PH	VOLTS ALTERNATING CURRENT, NUMBER OF PHASES
W, KW	WATTS, KILOWATTS
UH	UNIT HEATER
A	AUDIBLE/VISUAL ALARM DEVICE CONNECTED TO DUCT SMOKE DETECTOR
AD AD	ACCESS DOOR
	RADIUS ELBOW (R=1.5)
	VANED ELBOW
MOD	MANUAL VOLUME DAMPER (MVD), MOTOR OPERATED DAMPER (MOD)

LOUVER SCHEDULE

MARK	W X H (INCHES)	INTAKE CFM	FREE AREA (SQ. FT.)	PRESS. DROP (IN. W.G.)	(COLOR BY ARCHITECT)	MOTOR DAMPER OPERATOR	INTERLOCK	POWER/ PHASE	BASIS OF DESIGN	NOTES
L-1	48"X48"	4000	6.34	0.06	ENAMEL	YES	EF-1	120/1	GREENHECK EAC 401	1:2:3:4
L-2	48"X48"	4000	6.34	0.06	ENAMEL	YES	EF-2	120/1	GREENHECK EAC 401	1:2:3:4
L-3	24"X24"	600	0.62	0.06	ENAMEL	YES	EF-3	120/1	GREENHECK EAC 401	1:2:3:4

1. PROVIDE MOTORIZED INTAKE DAMPER FOR LOUVER. PROVIDE MANUFACTURER'S CORROSION RESISTANCE KYNER COATING FOR LOUVER AND DAMPER. PROVIDE BIRD AND INSECT SCREEN.
2. COORDINATE WITH ARCHITECTURAL PLANS FOR LOUVER ELEVATION.
3. COMBINATION LOUVER/DAMPER EXTRUDED ALUMINUM LOUVER. PROVIDE BIRD SCREEN.
4. TOP OF LOUVER AT BOTTOM OF STRUCTURE.

ELECTRIC UNIT HEATER SCHEDULE

EQUIPMENT NO.	VOLTS/PHASE	AIR FLOW (CFM)	TOTAL KW	LAY-OUT BASIS: CHROMALOX	NOTES
UH-1	480/3	590	7.5	HD3D-750+	1:2:3:4:5
UH-2	480/3	1180	12.5	HD3D-1250	1:2:3:4:5
UH-3	480/3	1180	12.5	HD3D-1250	1:2:3:4:5
UH-4	480/3	1180	12.5	HD3D-1250	1:2:3:4:5

1. VERIFY ELECTRIC POWER REQUIREMENTS WITH ELECTRICAL PLANS, WHICH TAKE PRECEDENCE OVER THIS INFORMATION.
2. PROVIDE WALL OR CEILING MOUNTING BRACKETS. BOTTOM OF HEATER AT 8'-0" AFF.
3. PROVIDE UNIT MOUNTED THERMOSTAT, CONTACTOR, AND INTEGRAL FAN CONTROL POWER TRANSFORMER AND INTEGRAL DISCONNECT SWITCH.
4. ALL HEATER COMPONENTS SHALL BE HOUSED IN 4X ENCLOSURE SUITABLE FOR CORROSIVE ENVIRONMENTS AND WASH DOWN APPLICATION.
5. HEATER CASING INCLUDING ALL ITS COMPONENTS SHALL BE EPOXY PAINTED.

MINI SPLIT & COOLING ONLY FAN COIL SYSTEM SCHEDULE

OUTDOOR UNIT MARK	INDOOR UNIT MARK	MIN COOLING MBH	MIN HEATING MBH	SUPPLY AIR CFM HI-LO	POWER VAC/PH	CARRIER MODEL #		SERVES	NOTES
						OUTDOOR	INDOOR		
HPU-1	ACU-1	36.0	36.0	380-840	208/1	38MARBQ36AA3	40MAHBQ36XA3	ELECTRICAL ROOM	1:2:3:4:5:6:7
HPU-2	ACU-2	36.0	36.0	380-840	208/1	38MARBQ36AA3	40MAHBQ36XA3	ELECTRICAL ROOM	1:2:3:4:5:6:7
HPU-3	ACU-3	36.0	36.0	380-840	208/1	38MARBQ36AA3	40MAHBQ36XA3	ELECTRICAL ROOM	1:2:3:4:5:6:7
HPU-4	ACU-4	36.0	36.0	380-840	208/1	38MARBQ36AA3	40MAHBQ36XA3	ELECTRICAL ROOM	1:2:3:4:5:6:7

1. VERIFY ELECTRICAL POWER REQUIREMENTS WITH ELECTRICAL PLANS WHICH TAKES PRECEDENCE OVER THIS INFORMATION.
2. MINI SPLIT SYSTEM MOUNTED ON WALL (SEE PLANS). PROVIDE MANUFACTURER'S WIERED THERMOSTAT
3. ROUTE CONDENSATE TO OUTSIDE. REFER TO DRAWING FOR FURTHER INFORMATION. PROVIDE RECTOR SEAL COIL MOUNTED(CLIPPED TO COIL) SATE-T-SWTCH SS610E.
4. WIRE SWTCH TO SHUT UNIT DOWN IN CASE OF CONDENSATE OVERFLOW. PROVIDE SELF CLEANING IONIZATION SYSTEM FOR UNIT. REFER TO SCHEDULE FOR FURTHER INFORMATION.
5. PROVIDE DISCONNECT AND ELECTRICAL CONNTECTION TO OUTDOOR UNIT PER MANUFACTURER'S INSTRUCTIONS.
6. COOLING RANGE SHALL BE BETWEEN -22 F TO 122F. HEATING RANGE SHALL BE -22F TO 86F.
7. PROVIDE CONDENSATE PUMP LOCATED WITHIN ACU CABINET TO PUMP CONDENSATE TO DRAIN OUTSIDE WHERE REQUIRED. OMIT PUMP WHERE GRAVITY DRAIN IS POSSIBLE.

GMC
2660 Eastchase Lane
Suite 200
Montgomery, AL 36117
T 334.271.3200

1" 5" 0" 1"

ISSUE	DATE
ISSUED FOR BID	03-15-25
ADDENDUM 1	03-28-25

DESIGNER: DV
DRAWN BY: DV

COUNTY RD 29 WATER TREATMENT PLANT
PRATTVILLE WATER WORKS
PRATTVILLE, AL

CMGM230095

ALABAMA LICENSED No. 30182 PROFESSIONAL ENGINEER ALEC ZAYCHIK

B

MECHANICAL SCHEDULES

M-002

EDEC
EDEC, INC.
4120 CHATTAHOOCHEE TRACE
SUITE A
DULUTH, GEORGIA 30097
TEL. (770) 493-8685

This drawing is and shall remain the property of Goodwyn, Mills and Cawood, Inc. (GMC) and Goodwyn Mills Cawood LLC (GMC). Unauthorized use of any kind including use on other projects is prohibited. In the event that a conflict arises between the sealed drawings and the electronic files, the sealed drawings will govern.

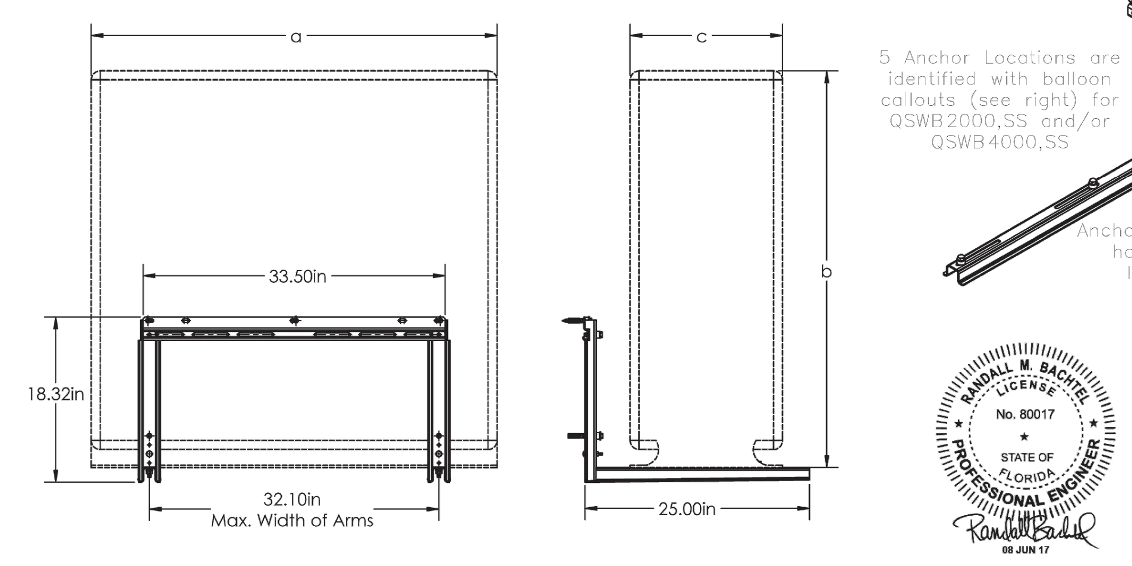

FL-22529.2

TABLE-3 CONDENSER UNIT (MAXIMUM) SPECIFICATIONS

Item	QSWB2000 QSWB2000SS	QSWB4000 QSWB4000SS
Max. Length (a) in.	42	48
Max. Height (b) in.	48	54
Max. Depth (c) in.	20	20
Max. Frontal Area (a x b) sq. in.	2020	2300
Max. Lateral Area (b x c) sq. in.	960	1100
Max. Weight (lbs.)	350	500

QSWB Part Number Notation
Diversitech QSWB4000 is equivalent to QSWB2000M-1.
QSWB2000 and QSWB4000 each come in stainless steel versions. These two part numbers have a suffix "SS"
Ex. QSWB2000SS and QSWB4000SS

DIVERSITECH — AISI 1045 Steel / Sy >= 59ksi — A/C Condensing Unit Wall Bracket Systems — DO NOT SCALE DRAWING — Models: QSWB2000, QSWB2000SS, QSWB4000 & QSWB4000SS — REV. A — 01JAN18 — 1 OF 5

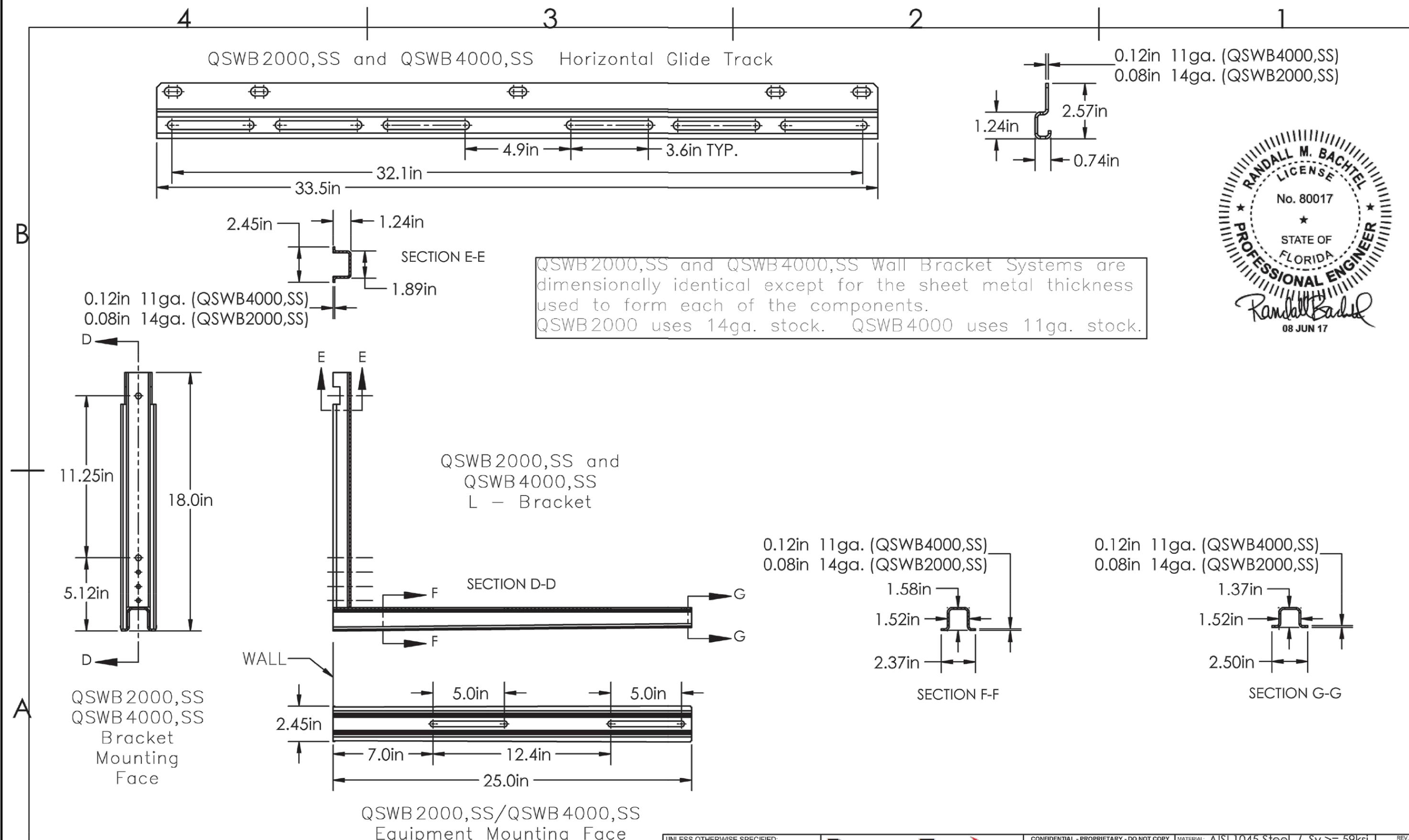

QSWB2000,SS and QSWB4000,SS Wall Bracket Systems are dimensionally identical except for the sheet metal thickness used to form each of the components.
QSWB2000 uses 14ga. stock. QSWB4000 uses 11ga. stock.

DIVERSITECH — AISI 1045 Steel / Sy >= 59ksi — A/C Condensing Unit Wall Bracket Systems — DO NOT SCALE DRAWING — Models: QSWB2000, QSWB2000SS, QSWB4000 & QSWB4000SS — REV. A — 01JAN18 — 2 OF 5

GENERAL NOTES:
1) All four (4) wall bracket models characterized in this document: QSWB2000, QSWB2000SS, QSWB4000 & QSWB4000SS are designed to conform to the requirements as determined in the Florida Building Code - 6th Edition (2017) and ASCE7-10.
2) These four products/models are all designed for use within and outside of High Velocity Hurricane Zones, including Miami/Dade.
3) Building structure must be designed by licensed professional engineer to carry the loads applied from the selected wall bracket.
4) Wall bracket materials shall be AISI 1045 steel or equivalent or stronger with Sy >= 59ksi.
5) All anchors used to mount wall bracket to surrounding structure shall be as specified in these drawings, any substitutions shall be approved by a licensed professional engineer.
6) All hardware used (screws/fasteners) shall be corrosion resistant.
7) Alterations or additions to this document are not permitted.

QSWB Wall Bracket Anchor Schedule
Each of the four QSWB Wall Bracket Systems covered in this document are provided with all the required hardware to build the wall bracket assembly. Anchors are also provided to mount the wall bracket to the building structure including: expansion anchors for concrete and lag screws for wood.
Mounting each QSWB bracket to the supporting structure requires 5 anchors total. See isometric view on pg-1 of this document. 3 anchors are used for the horizontal mounting rail and 1 each are used at the bottom of each mounting "L-Bracket".
Each of the QSWB sizes/models including: QSWB2000, QSWB2000SS, QSWB4000, QSWB4000SS will use the hardware that comes with the assembly / kit.
Anchor substitutions (if desired) can be made using the Anchor schedule on pg-4.
Any deviations from these anchor schedules must be approvved by a licensed professional engineer.

QSWB WALL BRACKET - LOAD TRANSFER CALCULATIONS TO SUPPORTING STRUCTURE (MAX WIND EFFECT)
The maximum pullout requirement (per anchor) is 1750 lbs. and the maximum shear requirement (per anchor) is 420 lbs. for any of the four (4) QSWB Series Wall brackets covered in this document. 117.1 PSF Max. Wind Pressure, 500 lb. Max. Condenser Payload, S.F. = 2.0

TABLE-2 WIND / VELOCITY PRESSURE CALCULATIONS
FOR ALL WALL BRACKET DESIGNS

Max. Building Height (ft)	30	30	30	30	50	50	50	50	100
Risk Category	II	II	III/IV	III/IV	II	II	III/IV	III/IV	II
Exposure	C	D	C	D	C	D	C	D	C
Max. Wind Speed (MPH)	180	180	200	200	180	180	200	200	180
Max. Wind Pressure (psf)	63.1	86.2	90.4	107	81.4	94.8	100.5	117.1	94.1

DIVERSITECH — AISI 1045 Steel / Sy >= 59ksi — A/C Condensing Unit Wall Bracket Systems — DO NOT SCALE DRAWING — Models: QSWB2000, QSWB2000SS, QSWB4000 & QSWB4000SS — REV. A — 01JAN18 — 3 OF 5

QSWB (ALTERNATE) Wall Bracket Anchor Schedule
QSWB2000, QSWB2000SS, QSWB4000, QSWB4000SS each use 5 anchors to attach the wall bracket to the supporting structure. Hardware is included with each QSWB system. The anchors below can be used in place of the anchors provided. Any deviations from these anchor schedules must be approvved by a licensed professional engineer.

For f'c > 3000 psi (20.7 MPa) Concrete - Cracked & Uncracked - 100' BLDG - Risk Cat. II - Exposure C		
Anchor Size (Select Any Below)	Minimum Embedment	Minimum Edge Distance
3/8" Titen HD anchors	3 - 3/4"	4 - 1/2"
3/8" Strong-Tie Strong Bolt	2"	6"
3/8" Hilti KWIK Bolt TZ	2 - 5/16"	4"
3/8" Heavy Duty Tapcon	2 - 1/2"	4"
5/16" Heavy Duty Tapcon	1 - 3/4"	4"

For f'c > 2000 PSI (13.8 MPa) Grout-Filled CMU - 50' BLDG - Risk Cat. II, III & IV - Exposure C & D		
For 8-inch Lightweight, Medium-Weight and Normal-Weight Hollow CMU - 30' BLDG - Risk Cat. II - Exposure C		
For 8-inch Lightweight, Medium-Weight and Normal-Weight Grout-Filled CMU - 40' BLDG - Risk Cat. II - Exposure C		
Anchor Size (Select Any Below)	Minimum Embedment	Minimum Edge Distance
3/8" Titen HD anchors	3 - 3/4"	12"
3/8" Strong-Tie Strong Bolt	2"	12"
3/8" Hilti KWIK Bolt TZ	2 - 5/16"	12"
3/8" Heavy Duty Tapcon	2 - 1/2"	12"
5/16" Heavy Duty Tapcon	1 - 3/4"	12"

Wood, G = 0.42 Min., Cd = 1.6 - 15' BLDG - Risk Cat. II - Exposure C			
Anchor Size	Minimum Embedment	Minimum Edge Distance	Minimum End Distance
3/8" LAG Screw	2 - 1/2"	5/8" into side grain	1 - 1/2"

DIVERSITECH — AISI 1045 Steel / Sy >= 59ksi — A/C Condensing Unit Wall Bracket Systems — DO NOT SCALE DRAWING — Models: QSWB2000, QSWB2000SS, QSWB4000 & QSWB4000SS — REV. A — 01JAN18 — 4 OF 5

QSWB Wall Mounting Brackets

Installation Instructions - Professional Installation Required

1. Ensure that the supporting wall structure that the bracket will be mounted on is capable of supporting the weight of the air conditioner unit and bracket and can support the anchor loads as indicated on the QSWB specification sheet, Pgs. 1 & 3.

2. Use the correct size wall mounting bracket (QSWB2000 or QSWB4000) to match up with the condenser unit weight. See Pg-1.

3. Remove the three wall mounting bracket parts and bag of hardware from the box.

4. Mount the horizontal glide track to the wall using 3 of the 5 anchors. Lag screws for wood and expansion anchors for concrete. Alternate anchors can be used by following the anchor schedule found in the QSWB specification sheet, Pg-4.

5. Mount the L-brackets to the guide track by using the hardware provided. (NOTE: Insert the 1 x 3/8 bolts and washers thru the L-bracket into the spring nuts).

6. Insert ¼-20 carriage bolts with nuts through the bottom side of the L-bracket for equipment mounting. Place rubber washer (vibration and noise reducers) and nut to the top of the L-bracket equipment mounting bar.

RANDALL M. BACHTEL LICENSE No. 80017 STATE OF FLORIDA PROFESSIONAL ENGINEER 08 JUN 17

DIVERSITECH — AISI 1045 Steel / Sy >= 59ksi — A/C Condensing Unit Wall Bracket Systems — DO NOT SCALE DRAWING — Models: QSWB2000, QSWB2000SS, QSWB4000 & QSWB4000SS — REV. A — 01JAN18 — 5 OF 5

1 WALL MOUNTED BRACKET - DETAIL
SCALE: N.T.S.

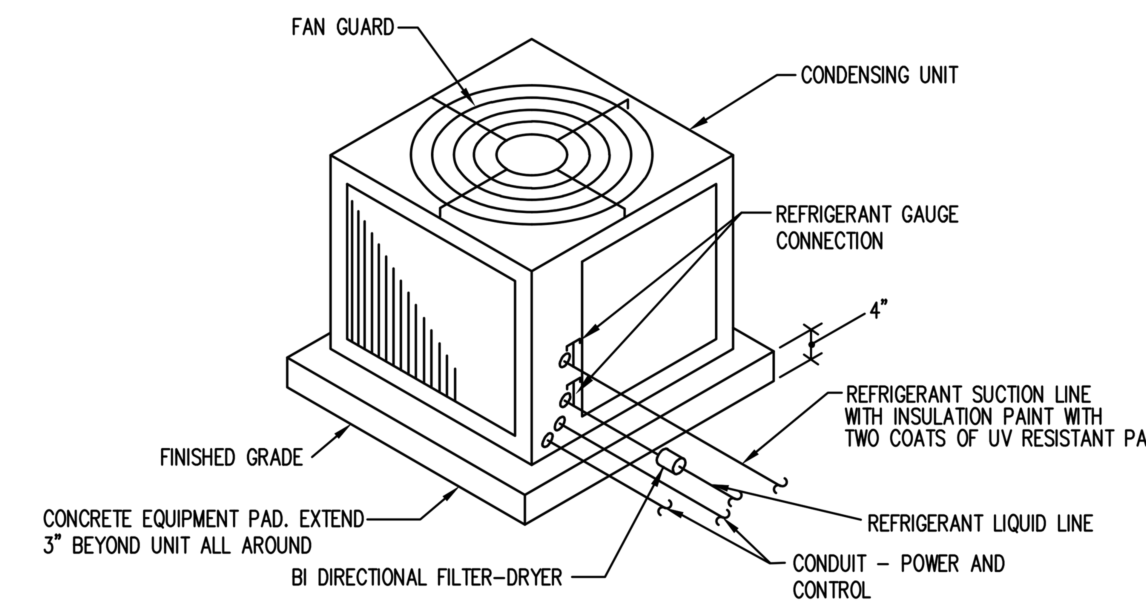

NOTE: 1) THIS DETAIL IS FOR HEAT PUMP UNIT 5 TONS AND UNDER
2) PROVIDE 4"X4"WELDED WIRE MESH REINFORCING AT CENTER LINE FOR THE CONCRETE PAD.
3

2 AIRCOOLED CONDENSING UNIT SLAB MOUNTED
SCALE: N.T.S.

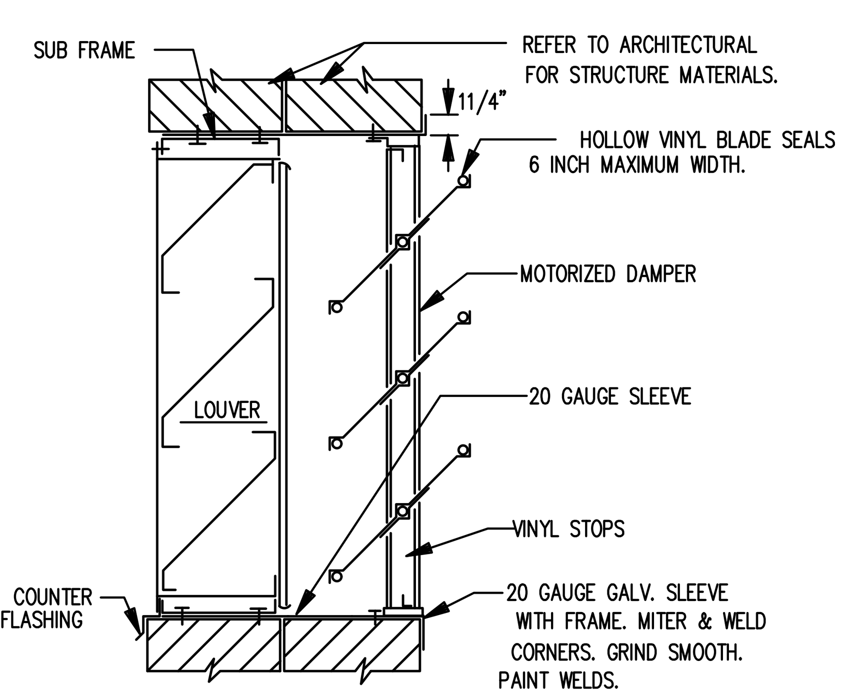

3 WALL MOUNTED LOUVER WITH DAMPER IN MASONRY WALL
SCALE: N.T.S.

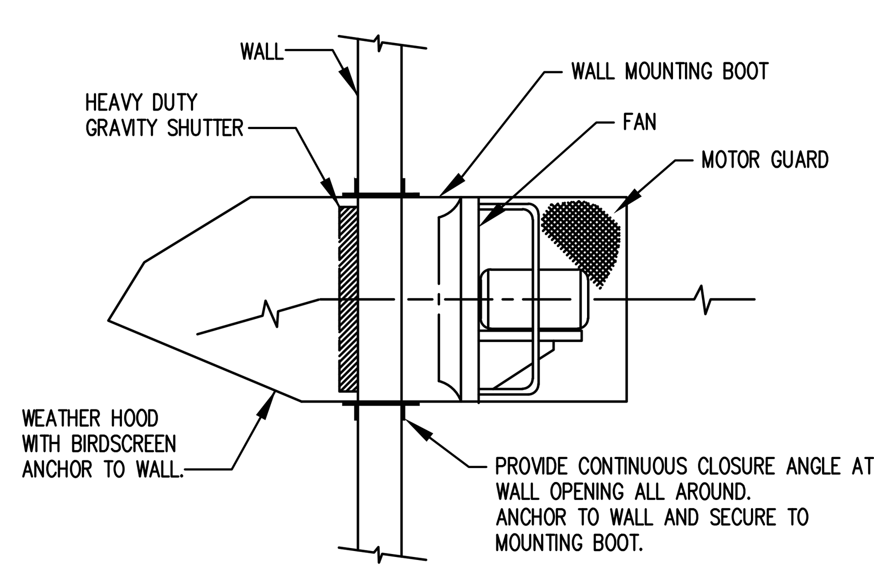

3 WALL FAN MOUNTING
SCALE: N.T.S.

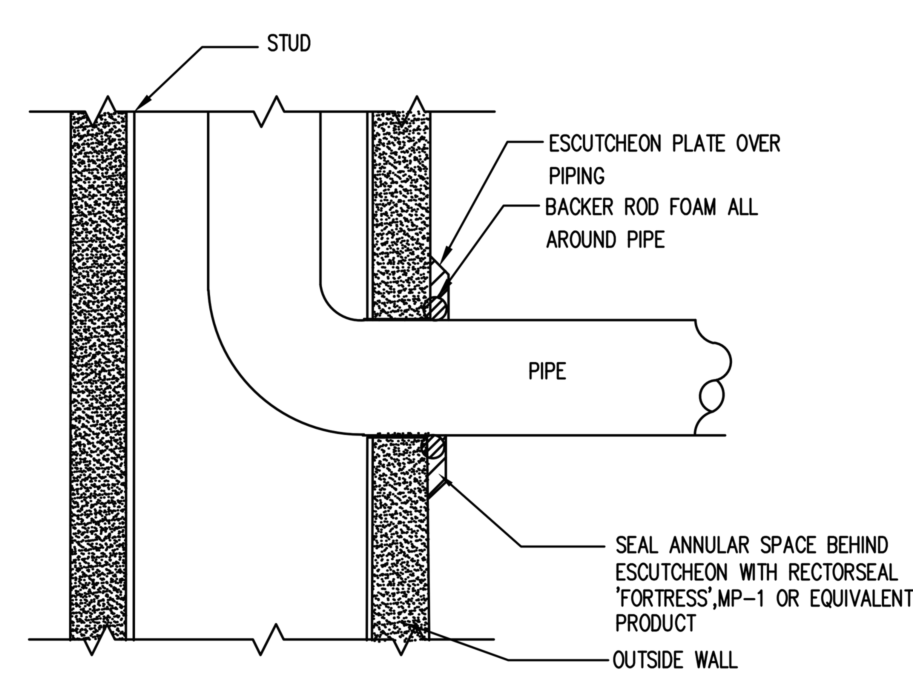

4 CONDENSATE PIPE SLEEVE THROUGH WALL DETAIL
SCALE: N.T.S.

GMC

2660 Eastchase Lane
Suite 200
Montgomery, AL 36117
T 334.271.3200

ISSUE	DATE
ISSUED FOR BID	03-15-25
ADDENDUM 1	03-28-25

DESIGNER: DV
DRAWN BY: DV

COUNTY RD 29 WATER TREATMENT PLANT
PRATTVILLE WATER WORKS
PRATTVILLE, AL

CMGM230095

ALABAMA LICENSED No. 30182 PROFESSIONAL ENGINEER ALEC ZAYCHIK

MECHANICAL DETAILS

M-003

EDEC, INC.
4120 CHATTAHOOCHEE TRACE
SUITE A
DULUTH, GEORGIA 30097
TEL. (770) 493-8685

This drawing is and shall remain the property of Goodwyn, Mills and Cawood, Inc. (GMC) and Goodwyn Mills Cawood LLC (GMC). Unauthorized use of any kind including use on other projects is prohibited. In the event that a conflict arises between the sealed drawings and the electronic files, the sealed drawings will govern.

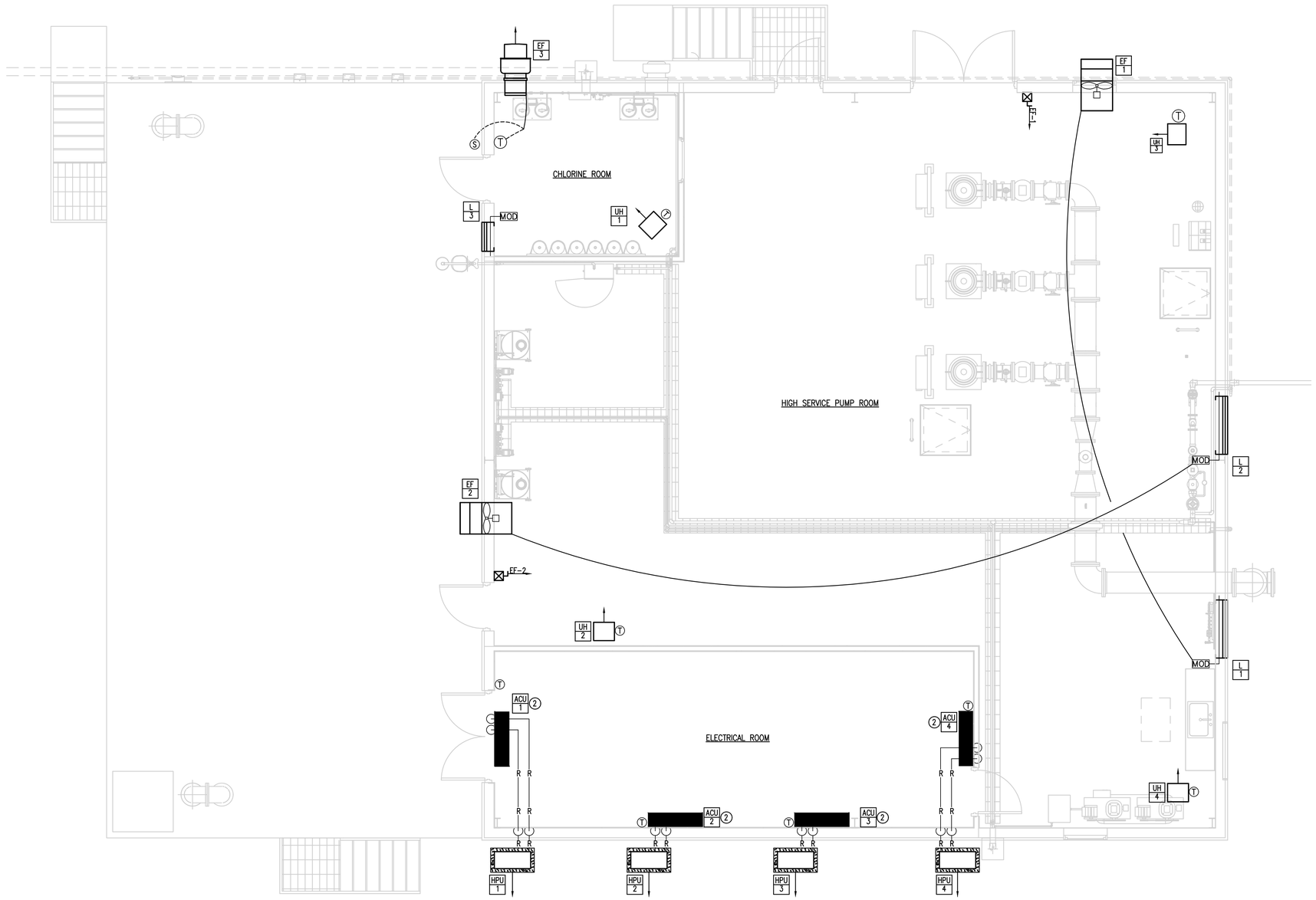

KEY NOTES(THIS SHEET ONLY):

1. WALL HUNG UNIT.
2. ROUTE CONDENSATE TO OUTSIDE WITH REFRIGERANT LINES. REFRIGERANT PIPE SHALL 3/4" PVC. ROUTE PIPE TO 12" AFF. PROVIDE 45-DEGREE ELBOW AT THE END OF PIPE TO GUIDE CONDENSATE AWAY FROM EXTERIOR WALL. PROVIDE SPLASH BLOCK AT DISCHARGE.

1 MECHANICAL PLAN

SCALE: 1/4"=1'-0"

GMC

2660 Eastchase Lane
Suite 200
Montgomery, AL 36117
T 334.271.3200

1" 5" 0" 1"

ISSUE	DATE
ISSUED FOR BID	03-15-25
ADDENDUM 1	03-28-25

DESIGNER: DV
DRAWN BY: DV

COUNTY RD 29 WATER TREATMENT PLANT
PRATTVILLE WATER WORKS
PRATTVILLE, AL

CMGM230095

ALABAMA LICENSED No. 30182 PROFESSIONAL ENGINEER ALEC ZAYCHIK

B

PUMP BUILDING - PLAN

M-601

EDEC

EDEC, INC.
4120 CHATTAHOOCHEE TRACE
SUITE A
DULUTH, GEORGIA 30097
TEL. (770) 493-8685

This drawing is and shall remain the property of Goodwyn, Mills and Cawood, Inc. (GMC) and Goodwyn Mills Cawood LLC (GMC). Unauthorized use of any kind including use on other projects is prohibited. In the event that a conflict arises between the sealed drawings and the electronic files, the sealed drawings will govern.

GENERAL PLUMBING NOTES:

Provide all plumbing items indicated on the drawings, described herein or otherwise required for a complete and proper installation, including:
A. Plumbing fixtures, fittings and equipment.
B. Hot and cold water systems.
C. Drain waste and vent piping systems.
D. Indirect waste piping, including all valves, traps, piping and accessories for all equipment. Size per equipment requirements.

Comply with all applicable codes, standards and ordinances, including requirements of the Georgia State Minimum Standard Plumbing Code (2018 International Plumbing Code with all Georgia State Amendments), Georgia State Minimum Standard Gas Code (2018 International Gas Code with all Georgia State Amendments), Georgia State Minimum Standard Energy Code (2015 International Energy Conservation Code with all Georgia State supplements and Amendments), and the DOJ 2010 ADA Standards for Accessible Design with Georgia Amendments of Rule 120-3-20.

The contractor should not attempt to precisely scale dimensions from these drawings to obtain construction dimensions and clearance. The contractor shall verify all actual dimensions and clearances. Although these plans are diagrammatic in nature, they shall be followed as closely as site conditions, new construction, and work by other trades shall permit. Deviations from these drawings, which are required to conform to the available space or to actual building construction, shall be made at no additional cost to the owner.

The submission of a bid or proposal will be construed as evidence that the contractor has familiarized himself with the plans and building site. Claims made subsequent to the proposal for materials and/or labor due to difficulties encountered will not be recognized unless these difficulties could not have been foreseen, even though proper examination had been made.

Fabrication or ordering of any material or equipment prior to verification of site conditions shall be done at the contractor's risk.

All equipment and material shall be new and of first quality. Equipment and material shall be the same or equal to the basis of design listed on these drawings.

Coordinate with all trades and verify all equipment rough-in items and locations with the equipment supplier or contractor. All re-work and corrections required due to lack of coordination shall be the contractor's responsibility, and done at no cost to the owner.

Submit shop drawings and material data submittals to the engineer for approval before installation. No substitutions shall be allowed without prior approval by the engineer. Product data for piping, insulation, valves, specialties and all fixtures and equipment scheduled and specified here. For each submittal for review, allow 15 days excluding delivery time to and from the Contractor.

All equipment and flue materials shall be U.L. listed.

Installation shall comply with manufacturer requirements including all clearances recommended for proper operation of service. All serviceable parts shall be readily accessible.

Below ground sanitary drain and vent piping shall be solid-wall ASTM D2665 schedule 40 PVC. Install underground, PVC plastic drainage piping according to ASTM D2321. Above ground sanitary drain and vent piping shall be cellular-core ASTM F891 schedule 40 PVC. Install aboveground PVC piping according to ASTM D 2665.
All aboveground piping shall be adequately supported. Sanitary drain and vent piping shall have PVC Socket Fittings (ASTM D 2665, made to ASTM D 3311, drain, waste, and vent patterns and to fit Schedule 40 pipe). Slope at 1/8 inch per foot continuously toward public sewer.

Insulate aboveground floor drains, traps, and sanitary drain piping within 10 feet of drain receiving condensate and equipment drain water below 60° with 1" thick type i performed glass-fiber pipe insulation, 1-1/2" cellular glass, or 1" flexible elestomeric.

All above ground domestic water distribution piping shall be ASTM D 2846, SDR11, schedule 40 CPVC with socket fittings. All piping shall be adequately supported. Disinfect all domestic water piping after installation. All underground domestic water distribution piping 1" and smaller shall be ASTM D 876 & ASTM F 877 PEX with no fittings underground. All underground domestic water distribution piping 1-1/4" and larger shall be ASTM D 1785 schedule 40 PVC with ASTM D 2466 PVC socket fittings.

Chemical waste piping shall be Charlotte pipe Chemdrain CPVC chemical waste schedule 40 drainage dipe and fittings.

DOMESTIC WATER PIPING CLEANING

A. Clean and disinfect potable domestic water piping as follows:
   1. Purge new piping and parts of existing piping that have been altered, extended, or repaired before using.
   2. Use purging and disinfecting procedures prescribed by authorities having jurisdiction; if methods are not prescribed, use procedures described in either AWWA C651 or AWWA C652 or follow procedures described below:
      a. Flush piping system with clean, potable water until dirty water does not appear at outlets.
      b. Fill and isolate system according to either of the following:
         1) Fill system or part thereof with water/chlorine solution with at least 50 ppm (50 mg/L) of chlorine. Isolate with valves and allow to stand for 24 hours.
         2) Fill system or part thereof with water/chlorine solution with at least 200 ppm (200 mg/L) of chlorine. Isolate and allow to stand for three hours.
      c. Flush system with clean, potable water until no chlorine is in water coming from system after the standing time.
      d. Repeat procedures if biological examination shows contamination.
      e. Submit water samples in sterile bottles to authorities having jurisdiction.
B. Prepare and submit reports of purging and disinfecting activities. Include copies of water-sample approvals from authorities having jurisdiction.
C. Clean interior of domestic water piping system. Remove dirt and debris as work progresses.

Domestic water piping shall be insulated with Owens Corning type ASJ/SSL-II heavy density fiber glass with all service jacket. Insulation shall have a flame spread rating not to exceed 25 and a smoke density not to exceed 50 when tested in accordance with U.B.C. standard 42-1. Provide mastic on all joints and exposed ends of insulation. Insulate domestic Cold water piping in unconditioned spaces such as exterior corridors, attic, basements, etc with 1/2" thick insulation for piping 1-1/4" & smaller and 1" thick insulation for piping 1-1/2" & larger. Insulate all domestic Hot water supply and return piping with 1" thick insulation for piping 1-1/4" & smaller and 1-1/2" thick insulation for piping 1-1/2" & larger.

HW & CW Valves: Use pipe size valves, as shown below:
A. Ball: Spears CPVC True Union.
B. Check: Spears CPVC True Union.

Ball-Valve-Type Hose-End Drain Valves shall comply with MSS SP-110 for standard-port, two-piece ball valves. Copper alloy body, 3/4", 400-psig pressure rating, replaceable seats and seals, vinyl-covered steel handle, threaded short nipple outlet with garden-hose thread complying with ASME B1.20.7 and cap with brass chain.

Fixture tailpieces, wall escutcheon, and traps for lavatories and sinks shall be brass tubing, semi-cast, or cast iron: All brass tubing shall be 17 gage, chrome plated. Exception: If the fixture tailpieces and traps are located in cabinets, the tailpiece & trap shall be PVC. Grid drains for public lavatories. Basket strainers for break room sinks.

For accessible-fixture support include rectangular steel uprights. Lavatory Supports shall be type II, lavatory carrier with concealed arms and tie rod for wall-mounting, lavatory-type fixture. Include steel uprights with feet. For accessible-fixture support include rectangular steel uprights. Plate type wall hangers for water coolers. Water closet carrier shall be ASME A112.6.1M waste-fitting assembly, as required to match drainage piping material and arrangement with faceplates, couplings gaskets, and feet; bolts and hardware matching fixture. Include additional extension coupling, faceplate, and feet for installation in wide pipe space if required.

Lavatory/ Sink supply fittings: NSF Standard: Comply with NSF/ANSI 61 Annex G, "Drinking Water System Components – Health Effects," for supply-fitting materials that will be in contact with potable water. Standard: ASME A112.18.1/CSA B125.1. Supply Stops: Chrome-plated-brass, one-quarter-turn, ball-type valve with inlet connection matching supply piping. Wheel handle operation. Risers: Chrome-plated, soft-copper flexible tube for exposed applications and ASME A112.18.6, braided- or corrugated-stainless-steel, flexible hose for conceal behind cabinet applications.

Provide ADA Supply and Drain Protective Shielding Guards on ADA fixtures that piping is exposed. Supply and Drain Protective Shielding Guards shall comply with ICC A117.1 and Americans with Disabilities Act (ADA) requirements. Manufactured plastic wraps shall cover hot and cold water supplies, trap, and drain piping.

All pipe hangers, clamps and channels shall be adequately sized to carry pipe loads and prevent sagging.

All other materials not specifically described but required for a complete and proper installation of work of this section, shall be new, first quality of their respective kinds, and as selected by the contractor subject to acceptance by the engineer.

Lay out the plumbing system in careful coordination with the drawings, determining proper elevations for all components of the system and using only the minimum number of bends to produce a satisfactorily functioning system. Follow the general layout shown on the drawings in all cases except where other work may interfere. Unless shown otherwise, lay out all pipes to fall within partition, wall floor, or roof cavities, and to not require furring other than as shown on the drawings.

Do not cut into or reduce the size of any load-carrying member without the prior approval of the architect. Install all pipes to clear all beams and obstructions.

Permanently close and make weatherproof any openings or penetrations of the building envelope made for plumbing systems. All wall and floor penetrations shall be sleeved. All exterior wall or foundation wall penetrations shall use a mechanical seal.
Coordinate all roof penetrations with architectural plans and building and roofing trades.

Provide shut-off balls valves and unions at all water connections to equipment and appliances.

Isolate all dissimilar metals with "EPCO" dielectric unions, except for brass or bronze valves with steel pipe.

Protect the potable water supply against backflow and siphonage from equipment, fixtures, etc., using approved backflow and anti-siphon devices.

Thoroughly clean all piping and equipment. Removing all dirt, rust, oil, and plaster.

Test Sanitary and storm drainage piping by plugging all openings and filling with water to a height equal to a 10 foot head. Allow to stand one hour or longer as required. Repair leaking joints and then re-test.

No work shall be covered until it has been inspected and accepted by the local authority and the engineer.

Domestic water piping tests: Fill domestic water piping. Check components to determine that they are not air bound and that piping is full of water. Test for leaks and defects in new piping and parts of existing piping that have been altered, extended, or repaired. Leave new, altered, extended, or replaced domestic water piping uncovered and unconcealed until it has been tested and approved. Expose work that was covered or concealed before it was tested. Cap and subject piping to static water pressure of 50 psig (345 kPa) above operating pressure, without exceeding pressure rating of piping system materials. Isolate test source and allow it to stand for four hours. Leaks and loss in test pressure constitute defects that must be repaired. Repair leaks and defects with new materials, and retest piping or portion thereof until satisfactory results are obtained.

The entire system shall be warranted for a period of one (1) year beginning with Owner's acceptance of the work. All labor and materials necessary to repair or replace the system, or portions thereof, during that time shall be warranted for a period of one (1) year from the repair or replacement.

Install piping in concealed locations, unless otherwise indicated and except in equipment rooms, and service areas. Install piping indicated to be exposed and piping in equipment rooms and service areas at right angles or parallel to building walls. Diagonal runs are prohibited unless specifically indicated otherwise. Install piping above accessible ceilings to allow sufficient space for ceiling panel removal. Install piping to permit valve servicing. Install piping at indicated slopes. Install piping free of sags and bends. Install fittings for changes in direction and branch connections. Install piping to allow application of insulation. Select system components with pressure rating equal to or greater than system operating pressure. Install escutcheons for penetrations of walls, ceilings, and floors. Verify final equipment locations for roughing-in.

Confirm that millwork is constructed with adequate provision for the installation of counter top lavatories and sinks.

Seal fixtures to wall and floor surfaces with sealant, color to match fixture.

All vents thru roof (SWVT) shall be offset a minimum of 10'-0" from all outside air intakes.

Provide Plastic Pipe Markers on all aboveground plumbing piping that Comply with ASME A13.1. Minimum information indicating flow direction arrow and identification of fluid being conveyed. Install labeling on pipe at intervals of not more than 20 feet and at least once in each room.

Provide a complete through penetration fire stopping assembly for fire resistance rated wall assemblies. The through penetration assembly must be listed by an approved third-party test agency (UL), and include the entire listed assembly with all notations. Refer to architectural drawings for fire wall locations.

Provide a backflow preventer at the water riser if backflow preventer is not shown on civil drawings.Provide pressure reducing valve (PRV) if water pressure increases above 80 psi.

Approved manufactures: (Items submitted shall be approved by architect and engineer. Architect and engineer reserve the right to reject any item substituted for basis of design item for any reason.)

China Fixtures: American Standard, Kohler, Toto, Zurn, Sloan
Faucets: Delta, T&S Brass, Chicago Faucets, Zurn, Kohler, Grohe, Moen, Speakman, Symmons
Supplies & Traps: Engineered Brass CO., Mcguire, Charlotte Pipe, Brasscraft, IPS, Watts, Zurn
Floor Drains & Cleanouts: Zurn, Jay R Smith, Proset, Watts, Mifab, Wade, Josam, Sioux Chief, Oatey
Tankless Electric Water Heaters: A.O. Smith, Rheem, EEmax, Chronomite
Toilet Seats: Bemis, Centoco, Church Seats, Olsonite, Beneke, Zurn, Mainline
ADA Protective Shielding Pipe Covers: Engineered Brass, McGuire, Plumberex, TRUEBRO, Zurn, Oatey
Fixture Supports: MIFAB, Jay R. Smith, Wade, Watts, Zurn
Wall Hydrants/ Hose Bibbs: MIFAB, Jay R. Smith, Wade, Watts, Woodford, Zurn
CPVC Valves: American, NIBCO, Spears

FIXTURE AND EQUIPMENT SCHEDULE

#	FIXTURE TYPE	WASTE		WATER SUPPLY		WATER FIX. CONN.		MODEL NUMBER
		BELOW FLOOR	FIXTURE CONN.	COLD	HOT	COLD	HOT	
ESS	COMBINATION DRENCH SHOWER AND EYE/FACE WASH				1-1/4"		1-1/4"	BRADLEY S19314-0-A-1-A-B-0-A-0-0.
SWVT	SIDE WALL VENT TERMINAL	3"	3"					WATTS MS-8000.
FD	FLOOR DRAIN WITH WATERLESS TRAP PRIMER	SEE DWGS	SEE DWGS					JOSAM FD-504-J5PVC FLOOR DRAIN. RECTORSEAL "SURESEAL PLUS" WATERLESS TRAP PRIMER.
GCO	GRADE CLEANOUT	SEE DWGS	SEE DWGS					WATTS CO-200-RX-4-60.
HB1	EXTERIOR HOSE BIBB			3/4"		3/4"		WOODFORD B65.
BV	GATE TYPE BACK WATER VALVE	SEE DWGS	SEE DWGS					ZURN 1088
HB2	BACKFLOW PROTECTED AUTOMATIC DRAINING FREEZELESS HOSE BIBB			3/4"		3/4"		WOODFORD 27.
SNK	SINGLE COMPARTMENT LAB SINK 31"LX22"WX10"D	2"	1-1/2"	1/2"	1/2"	1/2"	1/2"	ELKAY DLR312210PD SINK. ZURN Z826C4-XL FAUCET.

B

WATER HEATER SCHEDULE

MARK	MANUFACTURER	MODEL NUMBER	TYPE	GPH @90° RISE	ACTIVATION GPM	KW	PHASE	VOLTAGE
WH1	BRADLEY	SNA363480DN4X316	TANKLESS ELECTRIC	N/A	1.5	36.0	3	480
WH2	CHRONOMITE	ERB-81L/480_3	TANKLESS ELECTRIC	N/A	2.6	39.0	3	480
WH3	CHRONOMITE	R-48L/277	TANKLESS ELECTRIC	N/A	0.35	13.3	1	277

NOTE: PROVIDE MANUFACTURER'S DISCONNECT SWITCH FOR WH3

LEGEND

	SHUTOFF VALVE		COLD WATER	(TYP)	TYPICAL	VTR	VENT THRU ROOF
	CHECK VALVE		HOT WATER	C.T.	COUNTER-TOP	AFF	ABOVE FINISHED FLOOR
	PIPE UP		HOT WATER RETURN	DN	DOWN	CW	COLD WATER
	PIPE DOWN		SEWER VENT	CONN.	CONNECTION	HW	HOT WATER
PDI-B (B)	PDI UNIT -WATER HAMMER ARRESTOR		SEWER	NTS	NOT TO SCALE	B.F.F.	BELOW FINISH FLOOR
DWGS.	DRAWINGS	F	FIRE SPRINKLER	VT	VENT	FLR	FLR
	EXISTING TO REMAIN	G	GAS			FFE	FINISHED FLOOR ELEVATION
	CONNECT TO EXISTING						

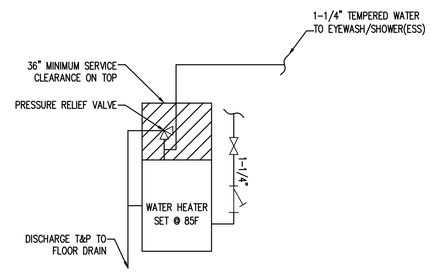

NOTE:
GENERAL PIPING SCHEMATIC
SEE FLOOR PLAN FOR LOCATIONS

WATER HEATER(WH1) PIPING SCHEMATIC
SCALE: N.T.S.

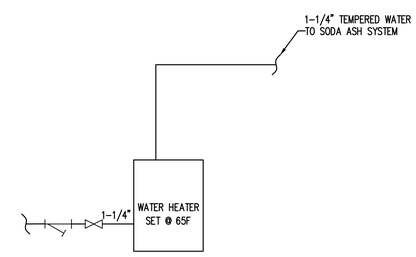

NOTE:
GENERAL PIPING SCHEMATIC
SEE FLOOR PLAN FOR LOCATIONS

WATER HEATER(WH1) PIPING SCHEMATIC
SCALE: N.T.S.

EDEC, INC.
4120 CHATTAHOOCHEE TRACE
SUITE A
DULUTH, GEORGIA 30097
TEL. (770) 493-8685

GMC

2660 Eastchase Lane
Suite 200
Montgomery, AL 36117
T 334.271.3200

1" 5" 0" 1"

ISSUE	DATE	
ISSUED FOR BID	03-15-25	
ADDENDUM 1	03-28-25	
DESIGNER:		DV
DRAWN BY:		DV

COUNTY RD 29 WATER TREATMENT PLANT
PRATTVILLE WATER WORKS
PRATTVILLE, AL
CMGM230095

ALABAMA LICENSED No. 30182 PROFESSIONAL ENGINEER ALEC ZAYCHIK

B

PLUMBING SPECIFICATIONS & SCHEDULES

P-001

This drawing is and shall remain the property of Goodwyn, Mills and Cawood, Inc. (GMC) and Goodwyn Mills Cawood LLC (GMC). Unauthorized use of any kind including use on other projects is prohibited. In the event that a conflict arises between the sealed drawings and the electronic files, the sealed drawings will govern.

GENERAL PLUMBING NOTES:

Provide all plumbing items indicated on the drawings, described herein or otherwise required for a complete and proper installation, including:
A. Plumbing fixtures, fittings and equipment.
B. Hot and cold water systems.
C. Drain waste and vent piping systems.
D. Indirect waste piping, including all valves, traps, piping and accessories for all equipment. Size per equipment requirements.

Comply with all applicable codes, standards and ordinances, including requirements of the Georgia State Minimum Standard Plumbing Code (2018 International Plumbing Code with all Georgia State Amendments), Georgia State Minimum Standard Gas Code (2018 International Gas Code with all Georgia State Amendments), Georgia State Minimum Standard Energy Code (2015 International Energy Conservation Code with all Georgia State supplements and Amendments), and the DOJ 2010 ADA Standards for Accessible Design with Georgia Amendments of Rule 120-3-20.

The contractor should not attempt to precisely scale dimensions from these drawings to obtain construction dimensions and clearance. The contractor shall verify all actual dimensions and clearances. Although these plans are diagrammatic in nature, they shall be followed as closely as site conditions, new construction, and work by other trades shall permit. Deviations from these drawings, which are required to conform to the available space or to actual building construction, shall be made at no additional cost to the owner.

The submission of a bid or proposal will be construed as evidence that the contractor has familiarized himself with the plans and building site. Claims made subsequent to the proposal for materials and/or labor due to difficulties encountered will not be recognized unless these difficulties could not have been foreseen, even though proper examination had been made.

Fabrication or ordering of any material or equipment prior to verification of site conditions shall be done at the contractor's risk.

All equipment and material shall be new and of first quality. Equipment and material shall be the same or equal to the basis of design listed on these drawings.

Coordinate with all trades and verify all equipment rough-in items and locations with the equipment supplier or contractor. All re-work and corrections required due to lack of coordination shall be the contractor's responsibility, and done at no cost to the owner.

Submit shop drawings and material data submittals to the engineer for approval before installation. No substitutions shall be allowed without prior approval by the engineer. Product data for piping, insulation, valves, specialties and all fixtures and equipment scheduled and specified here. For each submittal for review, allow 15 days excluding delivery time to and from the Contractor.

All equipment and flue materials shall be U.L. listed.

Installation shall comply with manufacturer requirements including all clearances recommended for proper operation of service. All serviceable parts shall be readily accessible.

Below ground sanitary drain and vent piping shall be solid-wall ASTM D2665 schedule 40 PVC. Install underground, PVC plastic drainage piping according to ASTM D2321. Above ground sanitary drain and vent piping shall be cellular-core ASTM F891 schedule 40 PVC. Install aboveground PVC piping according to ASTM D 2665.
All aboveground piping shall be adequately supported. Sanitary drain and vent piping shall have PVC Socket Fittings (ASTM D 2665, made to ASTM D 3311, drain, waste, and vent patterns and to fit Schedule 40 pipe). Slope at 1/8 inch per foot continuously toward public sewer.

Insulate aboveground floor drains, traps, and sanitary drain piping within 10 feet of drain receiving condensate and equipment drain water below 60° with 1" thick type i performed glass-fiber pipe insulation, 1-1/2" cellular glass, or 1" flexible elestomeric.

All above ground domestic water distribution piping shall be ASTM D 2846, SDR11, schedule 40 CPVC with socket fittings. All piping shall be adequately supported. Disinfect all domestic water piping after installation. All underground domestic water distribution piping 1" and smaller shall be ASTM D 876 & ASTM F 877 PEX with no fittings underground. All underground domestic water distribution piping 1-1/4" and larger shall be ASTM D 1785 schedule 40 PVC with ASTM D 2466 PVC socket fittings.

Chemical waste piping shall be Charlotte pipe Chemdrain CPVC chemical waste schedule 40 drainage dipe and fittings.

DOMESTIC WATER PIPING CLEANING

A. Clean and disinfect potable domestic water piping as follows:
   1. Purge new piping and parts of existing piping that have been altered, extended, or repaired before using.
   2. Use purging and disinfecting procedures prescribed by authorities having jurisdiction; if methods are not prescribed, use procedures described in either AWWA C651 or AWWA C652 or follow procedures described below:
      a. Flush piping system with clean, potable water until dirty water does not appear at outlets.
      b. Fill and isolate system according to either of the following:
         1) Fill system or part thereof with water/chlorine solution with at least 50 ppm (50 mg/L) of chlorine. Isolate with valves and allow to stand for 24 hours.
         2) Fill system or part thereof with water/chlorine solution with at least 200 ppm (200 mg/L) of chlorine. Isolate and allow to stand for three hours.
      c. Flush system with clean, potable water until no chlorine is in water coming from system after the standing time.
      d. Repeat procedures if biological examination shows contamination.
      e. Submit water samples in sterile bottles to authorities having jurisdiction.
B. Prepare and submit reports of purging and disinfecting activities. Include copies of water-sample approvals from authorities having jurisdiction.
C. Clean interior of domestic water piping system. Remove dirt and debris as work progresses.

Domestic water piping shall be insulated with Owens Corning type ASJ/SSL-II heavy density fiber glass with all service jacket. Insulation shall have a flame spread rating not to exceed 25 and a smoke density not to exceed 50 when tested in accordance with U.B.C. standard 42-1. Provide mastic on all joints and exposed ends of insulation. Insulate domestic Cold water piping in unconditioned spaces such as exterior corridors, attic, basements, etc with 1/2" thick insulation for piping 1-1/4" & smaller and 1" thick insulation for piping 1-1/2" & larger. Insulate all domestic Hot water supply and return piping with 1" thick insulation for piping 1-1/4" & smaller and 1-1/2" thick insulation for piping 1-1/2" & larger.

HW & CW Valves: Use pipe size valves, as shown below:
A. Ball: Spears CPVC True Union.
B. Check: Spears CPVC True Union.

Ball-Valve-Type Hose-End Drain Valves shall comply with MSS SP-110 for standard-port, two-piece ball valves. Copper alloy body, 3/4", 400-psig pressure rating, replaceable seats and seals, vinyl-covered steel handle, threaded short nipple outlet with garden-hose thread complying with ASME B1.20.7 and cap with brass chain.

Fixture tailpieces, wall escutcheon, and traps for lavatories and sinks shall be brass tubing, semi-cast, or cast iron: All brass tubing shall be 17 gage, chrome plated. Exception: If the fixture tailpieces and traps are located in cabinets, the tailpiece & trap shall be PVC. Grid drains for public lavatories. Basket strainers for break room sinks.

For accessible-fixture support include rectangular steel uprights. Lavatory Supports shall be type II, lavatory carrier with concealed arms and tie rod for wall-mounting, lavatory-type fixture. Include steel uprights with feet. For accessible-fixture support include rectangular steel uprights. Plate type wall hangers for water coolers. Water closet carrier shall be ASME A112.6.1M waste-fitting assembly, as required to match drainage piping material and arrangement with faceplates, couplings gaskets, and feet; bolts and hardware matching fixture. Include additional extension coupling, faceplate, and feet for installation in wide pipe space if required.

Lavatory/ Sink supply fittings: NSF Standard: Comply with NSF/ANSI 61 Annex G, "Drinking Water System Components – Health Effects," for supply-fitting materials that will be in contact with potable water. Standard: ASME A112.18.1/CSA B125.1. Supply Stops: Chrome-plated-brass, one-quarter-turn, ball-type valve with inlet connection matching supply piping. Wheel handle operation. Risers: Chrome-plated, soft-copper flexible tube for exposed applications and ASME A112.18.6, braided- or corrugated-stainless-steel, flexible hose for conceal behind cabinet applications.

Provide ADA Supply and Drain Protective Shielding Guards on ADA fixtures that piping is exposed. Supply and Drain Protective Shielding Guards shall comply with ICC A117.1 and Americans with Disabilities Act (ADA) requirements. Manufactured plastic wraps shall cover hot and cold water supplies, trap, and drain piping.

All pipe hangers, clamps and channels shall be adequately sized to carry pipe loads and prevent sagging.

All other materials not specifically described but required for a complete and proper installation of work of this section, shall be new, first quality of their respective kinds, and as selected by the contractor subject to acceptance by the engineer.

Lay out the plumbing system in careful coordination with the drawings, determining proper elevations for all components of the system and using only the minimum number of bends to produce a satisfactorily functioning system. Follow the general layout shown on the drawings in all cases except where other work may interfere. Unless shown otherwise, lay out all pipes to fall within partition, wall floor, or roof cavities, and to not require furring other than as shown on the drawings.

Do not cut into or reduce the size of any load-carrying member without the prior approval of the architect. Install all pipes to clear all beams and obstructions.

Permanently close and make weatherproof any openings or penetrations of the building envelope made for plumbing systems. All wall and floor penetrations shall be sleeved. All exterior wall or foundation wall penetrations shall use a mechanical seal.
Coordinate all roof penetrations with architectural plans and building and roofing trades.

Provide shut-off balls valves and unions at all water connections to equipment and appliances.

Isolate all dissimilar metals with "EPCO" dielectric unions, except for brass or bronze valves with steel pipe.

Protect the potable water supply against backflow and siphonage from equipment, fixtures, etc., using approved backflow and anti-siphon devices.

Thoroughly clean all piping and equipment. Removing all dirt, rust, oil, and plaster.

Test Sanitary and storm drainage piping by plugging all openings and filling with water to a height equal to a 10 foot head. Allow to stand one hour or longer as required. Repair leaking joints and then re-test.

No work shall be covered until it has been inspected and accepted by the local authority and the engineer.

Domestic water piping tests: Fill domestic water piping. Check components to determine that they are not air bound and that piping is full of water. Test for leaks and defects in new piping and parts of existing piping that have been altered, extended, or repaired. Leave new, altered, extended, or replaced domestic water piping uncovered and unconcealed until it has been tested and approved. Expose work that was covered or concealed before it was tested. Cap and subject piping to static water pressure of 50 psig (345 kPa) above operating pressure, without exceeding pressure rating of piping system materials. Isolate test source and allow it to stand for four hours. Leaks and loss in test pressure constitute defects that must be repaired. Repair leaks and defects with new materials, and retest piping or portion thereof until satisfactory results are obtained.

The entire system shall be warranted for a period of one (1) year beginning with Owner's acceptance of the work. All labor and materials necessary to repair or replace the system, or portions thereof, during that time shall be warranted for a period of one (1) year from the repair or replacement.

Install piping in concealed locations, unless otherwise indicated and except in equipment rooms, and service areas. Install piping indicated to be exposed and piping in equipment rooms and service areas at right angles or parallel to building walls. Diagonal runs are prohibited unless specifically indicated otherwise. Install piping above accessible ceilings to allow sufficient space for ceiling panel removal. Install piping to permit valve servicing. Install piping at indicated slopes. Install piping free of sags and bends. Install fittings for changes in direction and branch connections. Install piping to allow application of insulation. Select system components with pressure rating equal to or greater than system operating pressure. Install escutcheons for penetrations of walls, ceilings, and floors. Verify final equipment locations for roughing-in.

Confirm that millwork is constructed with adequate provision for the installation of counter top lavatories and sinks.

Seal fixtures to wall and floor surfaces with sealant, color to match fixture.

All vents thru roof (SWVT) shall be offset a minimum of 10'-0" from all outside air intakes.

Provide Plastic Pipe Markers on all aboveground plumbing piping that Comply with ASME A13.1. Minimum information indicating flow direction arrow and identification of fluid being conveyed. Install labeling on pipe at intervals of not more than 20 feet and at least once in each room.

Provide a complete through penetration fire stopping assembly for fire resistance rated wall assemblies. The through penetration assembly must be listed by an approved third-party test agency (UL), and include the entire listed assembly with all notations. Refer to architectural drawings for fire wall locations.

Provide a backflow preventer at the water riser if backflow preventer is not shown on civil drawings.Provide pressure reducing valve (PRV) if water pressure increases above 80 psi.

Approved manufactures: (Items submitted shall be approved by architect and engineer. Architect and engineer reserve the right to reject any item substituted for basis of design item for any reason.)

China Fixtures: American Standard, Kohler, Toto, Zurn, Sloan
Faucets: Delta, T&S Brass, Chicago Faucets, Zurn, Kohler, Grohe, Moen, Speakman, Symmons
Supplies & Traps: Engineered Brass CO., Mcguire, Charlotte Pipe, Brasscraft, IPS, Watts, Zurn
Floor Drains & Cleanouts: Zurn, Jay R Smith, Proset, Watts, Mifab, Wade, Josam, Sioux Chief, Oatey
Tankless Electric Water Heaters: A.O. Smith, Rheem, EEmax, Chronomite
Toilet Seats: Bemis, Centoco, Church Seats, Olsonite, Beneke, Zurn, Mainline
ADA Protective Shielding Pipe Covers: Engineered Brass, McGuire, Plumberex, TRUEBRO, Zurn, Oatey
Fixture Supports: MIFAB, Jay R. Smith, Wade, Watts, Zurn
Wall Hydrants/ Hose Bibbs: MIFAB, Jay R. Smith, Wade, Watts, Woodford, Zurn
CPVC Valves: American, NIBCO, Spears

FIXTURE AND EQUIPMENT SCHEDULE

#	FIXTURE TYPE	WASTE		WATER SUPPLY		WATER FIX. CONN.		MODEL NUMBER
		BELOW FLOOR	FIXTURE CONN.	COLD	HOT	COLD	HOT	
ESS	COMBINATION DRENCH SHOWER AND EYE/FACE WASH				1-1/4"		1-1/4"	BRADLEY S19314-0-A-1-A-B-0-A-0-0.
SWVT	SIDE WALL VENT TERMINAL	3"	3"					WATTS MS-8000.
FD	FLOOR DRAIN WITH WATERLESS TRAP PRIMER	SEE DWGS	SEE DWGS					JOSAM FD-504-J5PVC FLOOR DRAIN. RECTORSEAL "SURESEAL PLUS" WATERLESS TRAP PRIMER.
GCO	GRADE CLEANOUT	SEE DWGS	SEE DWGS					WATTS CO-200-RX-4-60.
HB1	EXTERIOR HOSE BIBB			3/4"		3/4"		WOODFORD B65.
BV	GATE TYPE BACK WATER VALVE	SEE DWGS	SEE DWGS					ZURN 1088
HB2	BACKFLOW PROTECTED AUTOMATIC DRAINING FREEZELESS HOSE BIBB			3/4"		3/4"		WOODFORD 27.
SNK	SINGLE COMPARTMENT LAB SINK 31"LX22"WX10"D	2"	1-1/2"	1/2"	1/2"	1/2"	1/2"	ELKAY DLR312210PD SINK. ZURN Z826C4-XL FAUCET.

B

WATER HEATER SCHEDULE

MARK	MANUFACTURER	MODEL NUMBER	TYPE	GPH @90° RISE	ACTIVATION GPM	KW	PHASE	VOLTAGE
WH1	BRADLEY	SNA363480DN4X316	TANKLESS ELECTRIC	N/A	1.5	36.0	3	480
WH2	CHRONOMITE	ERB-81L/480_3	TANKLESS ELECTRIC	N/A	2.6	39.0	3	480
WH3	CHRONOMITE	R-48L/277	TANKLESS ELECTRIC	N/A	0.35	13.3	1	277

NOTE: PROVIDE MANUFACTURER'S DISCONNECT SWITCH FOR WH3

LEGEND

	SHUTOFF VALVE		COLD WATER	(TYP)	TYPICAL	VTR	VENT THRU ROOF
	CHECK VALVE		HOT WATER	C.T.	COUNTER-TOP	AFF	ABOVE FINISHED FLOOR
	PIPE UP		HOT WATER RETURN	DN	DOWN	CW	COLD WATER
	PIPE DOWN		SEWER VENT	CONN.	CONNECTION	HW	HOT WATER
PDI-B (B)	PDI UNIT -WATER HAMMER ARRESTOR		SEWER	NTS	NOT TO SCALE	B.F.F.	BELOW FINISH FLOOR
DWGS.	DRAWINGS	F	FIRE SPRINKLER	VT	VENT	FLR	FLR
	EXISTING TO REMAIN	G	GAS			FFE	FINISHED FLOOR ELEVATION
	CONNECT TO EXISTING						

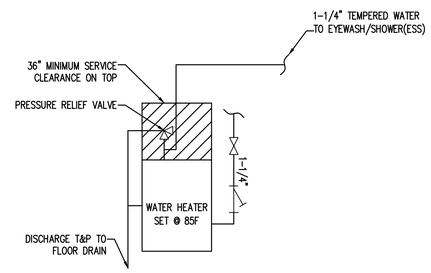

NOTE:
GENERAL PIPING SCHEMATIC
SEE FLOOR PLAN FOR LOCATIONS

WATER HEATER(WH1) PIPING SCHEMATIC
SCALE: N.T.S.

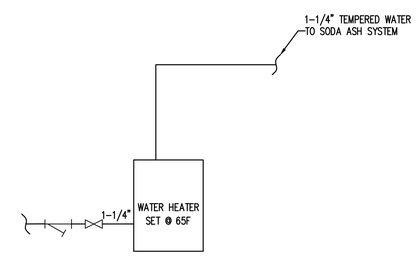

NOTE:
GENERAL PIPING SCHEMATIC
SEE FLOOR PLAN FOR LOCATIONS

WATER HEATER(WH1) PIPING SCHEMATIC
SCALE: N.T.S.

EDEC, INC.
4120 CHATTAHOOCHEE TRACE
SUITE A
DULUTH, GEORGIA 30097
TEL. (770) 493-8685

GMC

2660 Eastchase Lane
Suite 200
Montgomery, AL 36117
T 334.271.3200

1" 5" 0" 1"

ISSUE	DATE	
ISSUED FOR BID	03-15-25	
ADDENDUM 1	03-28-25	
DESIGNER:		DV
DRAWN BY:		DV

COUNTY RD 29 WATER TREATMENT PLANT
PRATTVILLE WATER WORKS
PRATTVILLE, AL
CMGM230095

ALABAMA LICENSED No. 30182 PROFESSIONAL ENGINEER ALEC ZAYCHIK

B

PLUMBING SPECIFICATIONS & SCHEDULES

P-001

This drawing is and shall remain the property of Goodwyn, Mills and Cawood, Inc. (GMC) and Goodwyn Mills Cawood LLC (GMC). Unauthorized use of any kind including use on other projects is prohibited. In the event that a conflict arises between the sealed drawings and the electronic files, the sealed drawings will govern.

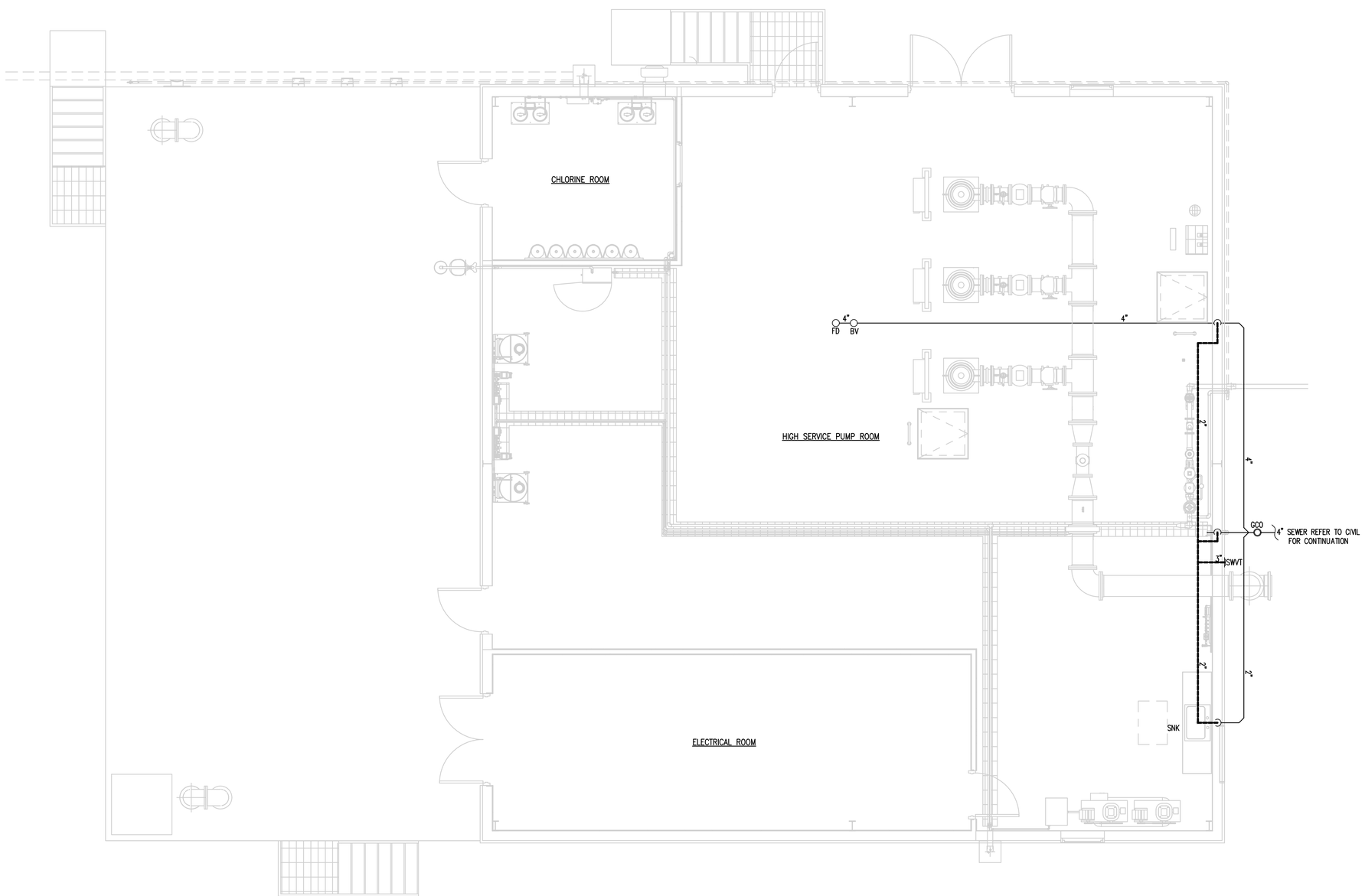

1 PLUMBING PLAN - SEWER
SCALE: 1/4"=1'-0"

GMC

2660 Eastchase Lane
Suite 200
Montgomery, AL 36117
T 334.271.3200

1" 5" 0" 1"

ISSUE	DATE
ISSUED FOR BID	03-15-25
ADDENDUM 1	03-28-25

DESIGNER: DV
DRAWN BY: DV

COUNTY RD 29 WATER TREATMENT PLANT
PRATTVILLE WATER WORKS
PRATTVILLE, AL

CMGM230095

ALABAMA LICENSED No. 30192 PROFESSIONAL ENGINEER ALEC ZAYCHIK

B

PUMP BUILDING PLAN - SEWER

P-601

EDEC, INC.
4120 CHATTAHOOCHEE TRACE
SUITE A
DULUTH, GEORGIA 30097
TEL. (770) 493-8685

This drawing is and shall remain the property of Goodwyn, Mills and Cawood, Inc. (GMC) and Goodwyn Mills Cawood LLC (GMC). Unauthorized use of any kind including use on other projects is prohibited. In the event that a conflict arises between the sealed drawings and the electronic files, the sealed drawings will govern.

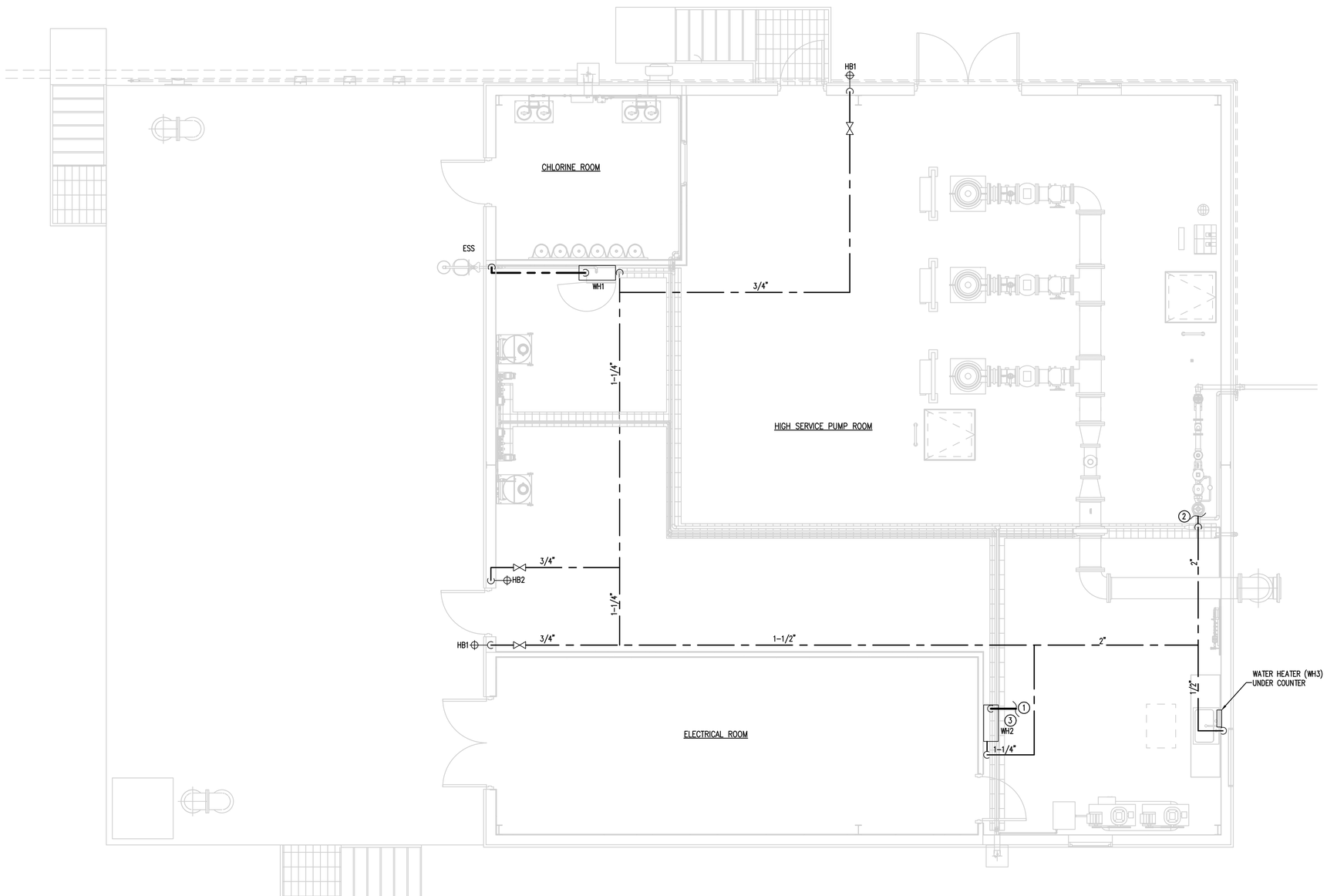

KEY NOTES(THIS SHEET ONLY):

1. CONNECT TO SODA ASH SYSTEM. LEAVING TEMPERATURE SET AT 65F.
2. REFER TO CIVIL FOR FURTHER INFORMATION ON DOMESTIC WATER.
3. FOLLOW MANUFACTURER'S PIPING DAGRAM FOR PIPING.

1 PLUMBING PLAN - WATER

SCALE: 1/4"=1'-0"

GMC

2660 Eastchase Lane
Suite 200
Montgomery, AL 36117
T 334.271.3200

1" 5" 0" 1"

ISSUE	DATE
ISSUED FOR BID	03-15-25
ADDENDUM 1	03-28-25

DESIGNER: DV
DRAWN BY: DV

COUNTY RD 29 WATER TREATMENT PLANT
PRATTVILLE WATER WORKS
PRATTVILLE, AL

CMGM230095

ALABAMA LICENSED No. 30182 PROFESSIONAL ENGINEER ALEC ZAYCHIK

B

PUMP BUILDING PLAN - WATER

P-602

EDEC

EDEC, INC.
4120 CHATTAHOOCHEE TRACE
SUITE A
DULUTH, GEORGIA 30097
TEL. (770) 493-8685

This drawing is and shall remain the property of Goodwyn, Mills and Cawood, Inc. (GMC) and Goodwyn Mills Cawood LLC (GMC). Unauthorized use of any kind including use on other projects is prohibited. In the event that a conflict arises between the sealed drawings and the electronic files, the sealed drawings will govern.